PRELIMINARY PLAN APPLICATION
- MAJOR LAND DEVELOPMENT PROJECT

FOR
10,640 SQ. FT. RETAIL BUILDING,
Parcel ID# 114-012 LOT A
BRONCOS HIGHWAY (RT. #102)
BURRILLVILLE, RHODE ISLAND

DATE: DECEMBER 28, 2023

OWNER

NASON SQUARE LLC
28 RIDGE HILL ROAD
NORTH SMITHFIELD, RI 02896

APPLICANT & DEVELOPER

REBEL-UNION PARTNERS, LLC
93 NORTH MAIN STREET
WEST HARTFORD, CT 06107
ATTENTION: MARK D'ADDABBO
PHONE NUMBER: 860-729-6812

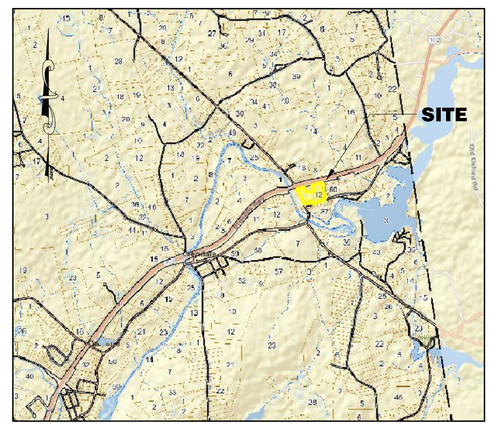

LOCATION MAP

NOT TO SCALE

SHEET INDEX

SHEET #	DRAWING TITLE
1	EXISTING CONDITIONS PLAN
2	ZONING IMPROVEMENT LOCATION SURVEY - PROPOSED
3	SITE GRADING & DRAIANGE PLAN
4	SITE UTILITIES PLAN
5	EROSION & SEDIMENT CONTROL PLAN
6	GENERAL SITE NOTES
7	EROSION AND SEDIMENT CONTROL NOTES & DETAILS
8	STORMWATER BASIN DETAIL PLAN
9	SANITARY SEWER LATERAL PLAN & PROFILE
10 -15	MISCELLANEOUS SITE DETAILS
LS-1	LANDSCAPING PLAN
PH-1.0	SITE LIGHTING PLAN

HALLISEY, PEARSON & CASSIDY
CIVIL ENGINEERS & LAND SURVEYORS
630 MAIN STREET, UNIT #1A
CROMWELL, CONNECTICUT 06416
PHONE: (860)-529-6812, FAX: (860)-721-7709

NO.	DATE	DESCRIPTION	BY
1	03/02/34	PER PEER REVIEW AND PLANNER COMMENTS	J.P.C.

BRONCOS HIGHWAY (RT. #102)

N/F
HARVEST TIME
A.P. 114, LOT 11

N/F
2612 REALTY COMPANY LLC
A.P. 114, LOT 13

N/F
DBH REALTY, LLC
A.P. 114, LOT 13

N/F
NASON SQUARE LLC
PARCEL "B"
REMAINING LAND OF
A.P. 114, LOT 12

N 74°38'33" E
364.10'

S15°51'29"E
228.99'

S15°51'29
64.55'

S74°42'34"W
335.33'

N23°01'25"W
223.15'

N23°01'25"W
7.50'

LOT AREA=
80,006 sq. ft.
1.8367 acres

EXIST. HISTORIC CEMETERY #39 ENCLOSED WITH GRANITE POSTS

25' PROTECTIVE BARRIER FROM HISTORIC CEMETERY

10' WIDE EASEMENT

EXIST. WELL

6' HIGH CHAIN LINK FENCE

BORING B-1
TOTAL DEPTH= 12'
NO STATIC GROUND WATER OBSERVED

BORING B-2
TOTAL DEPTH= 18'
NO STATIC GROUND WATER OBSERVED

I.P. FND. 0.10' FROM PL

I.P. FND. 0.04' FROM PL

I.P. FND. 0.38' FROM PL

I.P. FND. 1.24' FROM PL

I.P. FND. 0.20' FROM PL

I.P. FND. 1.78' FROM PL

NORTH

GRAPHIC SCALE

20 0 10 20 40 80

(IN FEET)
1 inch = 20 ft.

LEGEND

- EXISTING PROPERTY LINE
- EXISTING EDGE OF PAVEMENT
- I.P. FND. OR — IRON PIN OR IRON PIPE FOUND
- EXISTING TREE LINE
- 124 — EXISTING CONTOUR
- × 124.00 — EXISTING SPOT GRADE
- POLE # — EXISTING TELEPHONE POLE
- EXISTING BIT. CURB
- C.B. PIPE (SIZE, TYPE) — EXISTING STORM DRAINAGE SYSTEM
- EXISTING WATER MAIN
- W.M. PIPE (SIZE, TYPE) — EXISTING SANITARY SEWER
- LIMITS OF TOWN WETLANDS

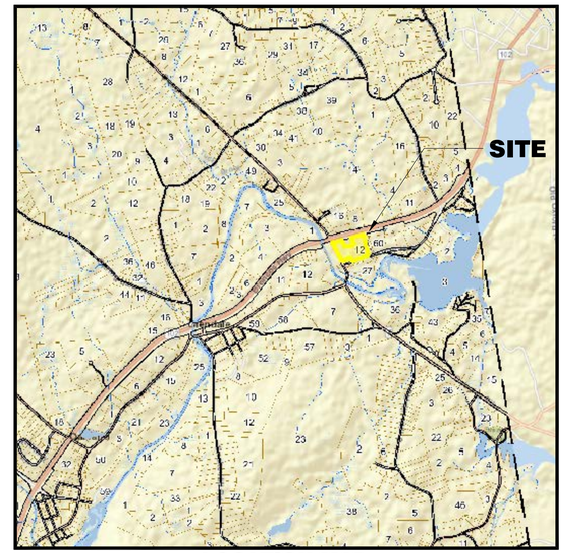

LOCATION MAP

SCALE: 1"=1,000'

NOTES:

1. SURVEY NOTES:
   - –Type Of Survey is PROPERTY/TOPOGRAPHIC
   - –Boundary Determination Category is DEPENDENT RESURVEY
   - –Class of Accuracy is: HOR.– 'A–2', TOPO.–'T–2', VERT.–'V–2'.
2. PROPERTY IS ZONED: GC & A–80
3. PROPERTY LIES IN FLOOD ZONE 'X' (AREA OF MINIMAL FLOOD HAZARD) PER F.I.R.M. COMMUNITY MAP NO. 44007C0151G DATED: MARCH 02, 2009.
4. MAP REFERENCES:
   - A) "MINOR SUBDIVISION FOR OWNER NASON SQUARE, LLC A.P. 114 LOT 12 BURRILLVILE RHODE ISLAND" SCALE: 1"=80'. DATED: MARCH 2023. PREPARED BY: TERRENCE J. GREENLIEF P.L.S. NO. 1800
   - B) "TOWN OF BURRILLVILE RI SEWER ASSESSMENT AND RECORD PLAN EASTERN VILLAGES CONTRACT 19B–1 SHEET 01A". SCALE: AS SHOWN. DATED: MARCH 2008. PREPARED BY: BETA GROUP, INC.
5. TOTAL PARCEL AREA= 80,006 SQ. FT. OR 1.8367 ACRES.
6. HORIZONTAL DATUM BASED ON N.A.D. OF 1983.
7. VERTICAL DATUM BASED ON NAVD 88. CONTOUR INTERVAL=1 FOOT
8. PROPERTY MAY BE BENEFITED AND/OR BURDENED BY RECORDED AND/OR UNRECORDED EASEMENTS.
9. UNDERGROUND UTILITY, STRUCTURE AND FACILITY LOCATIONS DEPICTED AND NOTED HEREON HAVE BEEN COMPILED, IN PART, FROM RECORD MAPPING SUPPLIED BY THE RESPECTIVE UTILITY COMPANIES OR GOVERNMENTAL AGENCIES, FROM PAROL TESTIMONY AND FROM OTHER SOURCES. THESE LOCATIONS MUST BE CONSIDERED AS APPROXIMATE IN NATURE. ADDITIONALLY, OTHER FEATURES MAY EXIST ON THE SITE, THE EXISTENCE OF WHICH ARE UNKNOWN TO HALLISEY, PEARSON AND CASSIDY ENGINEERING ASSOCIATES. THE SIZE, LOCATION AND EXISTENCE OF ALL SUCH FEATURES MUST BE FIELD DETERMINED AND VERIFIED BY THE APPROPRIATE AUTHORITIES PRIOR TO CONSTRUCTION. CALL BEFORE YOU DIG "811".

ZONING BULK TABLE

LOCATION: BRONCOS HIGHWAY, BURRILLVILLE, RHODE ISLAND
ZONE: GC & A–80
USE: RETAIL

ITEM #	SEC. #	ITEM	REQUIREMENTS	EXISTING
1	30–111	MIN. LOT AREA	80,000 sq. ft. (A–80)	80,000 sq. ft.
2	30–111	MIN. WIDTH	300' (A–80)	364.1'
3	30–111	MIN. FRONT SETBACK	55'	NA
4	30–111	MIN. SIDE SETBACK	15'	NA
5	30–111	MIN. REAR SETBACK	40' (A–80)	NA
6	30–111	Maximum Building Coverage	15% (A–80)	10,640/80,000=13.3%
7	30–111	MAX. BUILDING HEIGHT	35'	<35'
8		Parking requirement (RETAIL)	1 SPACE / 90 sq. ft.	NA

SCALE: 1"=20'
DATE: DEC. 28, 2023
JOB No.: 3470
SHEET: 1 OF: 15
CHECKED BY: JPC
DRAWN BY: JMP
ACAD FILE: 3470-EX
REVISIONS:
MARCH 02, 2024 PER PEER REVIEW AND PLANNER COMMENTS

HALLISEY, PEARSON & CASSIDY
CIVIL ENGINEERS & LAND SURVEYORS
630 MAIN STREET, UNIT #1A
CROMWELL, CONNECTICUT 06416
PHONE: (860)–529–6812, FAX: (860)–721–7709

PROPERTY/TOPOGRAPHIC SURVEY SHOWING EXISTING CONDITIONS PREPARED FOR REBEL-UNION PARTNERS, LLC PROPERTY LOCATED AT BRONCOS HIGHWAY (RT. #102) BURRILLVILLE, RHODE ISLAND

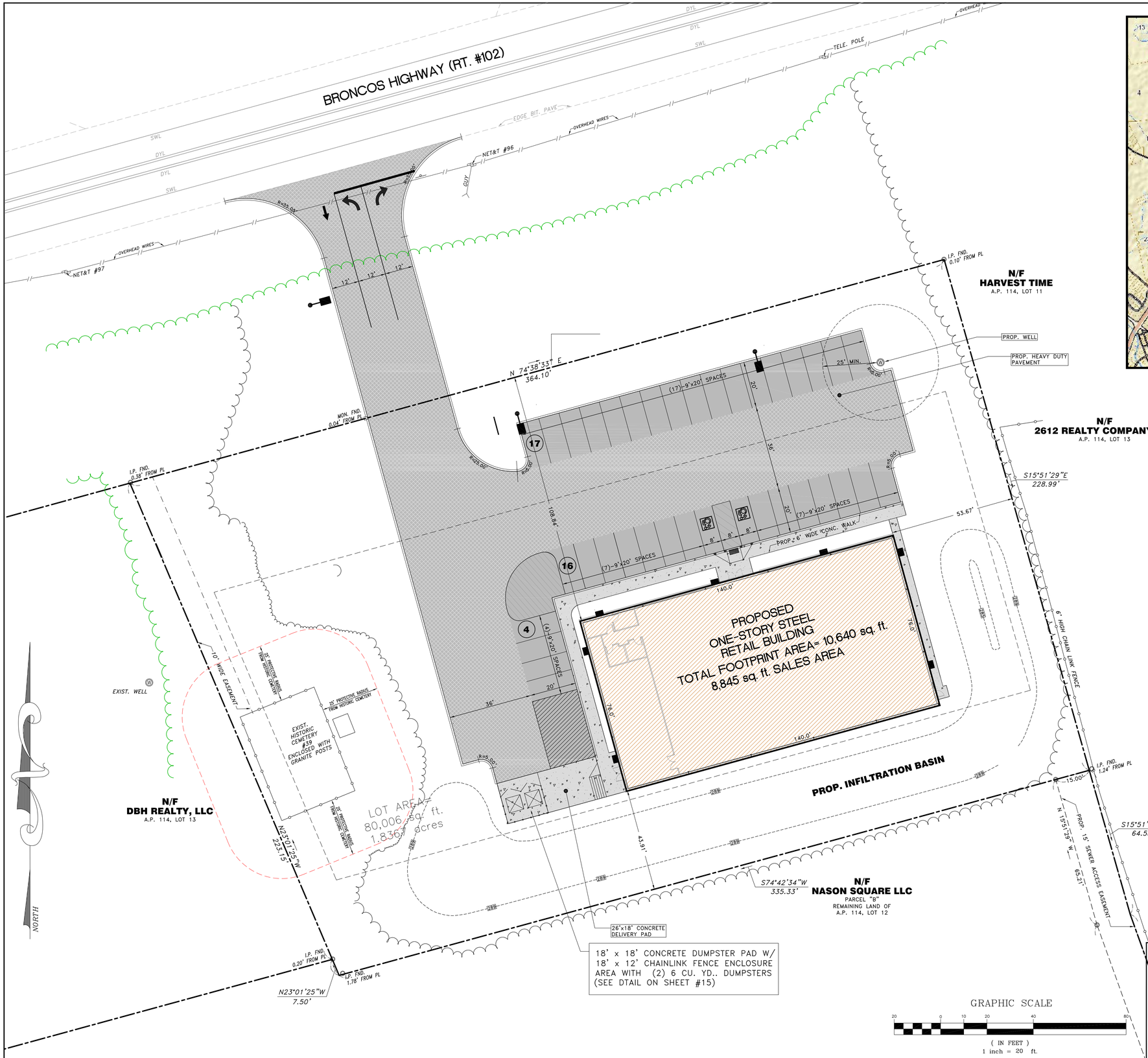

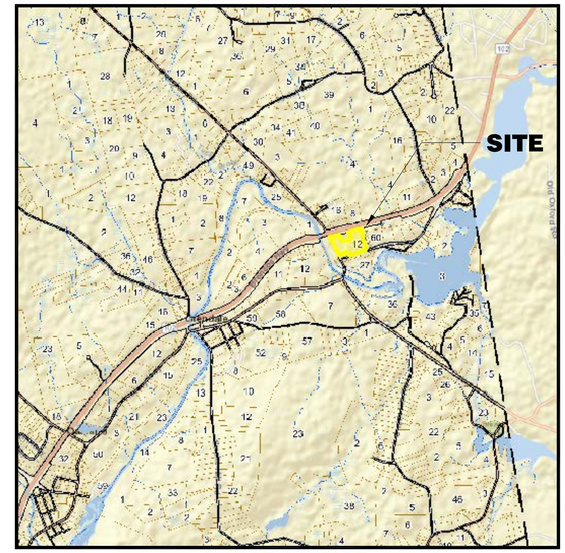

LOCATION MAP

SCALE: 1"=1.000'

NOTES:

1. SURVEY NOTES:

   –Type Of Survey is ZONING IMPROVEMENT LOCATION SURVEY–PROPOSED
   –Boundary Determination Category is DEPENDENT RESURVEY
   –Class of Accuracy is: HOR.– 'A–2', TOPO.–'T–2', VERT.–'V–2'.

2. PROPERTY IS ZONED: GC & A–80

3. PROPERTY LIES IN FLOOD ZONE 'X' (AREA OF MINIMAL FLOOD HAZARD) PER F.I.R.M. COMMUNITY MAP NO. 44007C0151G DATED: MARCH 02, 2009.

4. MAP REFERENCES:

   A) "MINOR SUBDIVISION FOR OWNER NASON SQUARE, LLC A.P. 114 LOT 12 BURRILLVILE RHODE ISLAND" SCALE: 1"=80'. DATED: MARCH 2023. PREPARED BY: TERRENCE J. GREENLIEF P.L.S. NO. 1800

   B) "TOWN OF BURRILLVILE RI SEWER ASSESSMENT AND RECORD PLAN EASTERN VILLAGES CONTRACT 19B–1 SHEET 01A". SCALE: AS SHOWN. DATED: MARCH 2008. PREPARED BY: BETA GROUP, INC.

5. TOTAL PARCEL AREA= 80,000 SQ. FT. OR 1.8365 ACRES.

6. HORIZONTAL DATUM BASED ON N.A.D. OF 1983.

7. VERTICAL DATUM BASED ON NAVD 88. CONTOUR INTERVAL=1 FOOT

8. PROPERTY MAY BE BENEFITED AND/OR BURDENED BY RECORDED AND/OR UNRECORDED EASEMENTS.

9. UNDERGROUND UTILITY, STRUCTURE AND FACILITY LOCATIONS DEPICTED AND NOTED HEREON HAVE BEEN COMPILED, IN PART, FROM RECORD MAPPING SUPPLIED BY THE RESPECTIVE UTILITY COMPANIES OR GOVERNMENTAL AGENCIES, FROM PAROL TESTIMONY AND FROM OTHER SOURCES. THESE LOCATIONS MUST BE CONSIDERED AS APPROXIMATE IN NATURE. ADDITIONALLY, OTHER FEATURES MAY EXIST ON THE SITE, THE EXISTENCE OF WHICH ARE UNKNOWN TO HALLISEY, PEARSON AND CASSIDY ENGINEERING ASSOCIATES. THE SIZE, LOCATION AND EXISTENCE OF ALL SUCH FEATURES MUST BE FIELD DETERMINED AND VERIFIED BY THE APPROPRIATE AUTHORITIES PRIOR TO CONSTRUCTION. CALL BEFORE YOU DIG "811".

ZONING BULK TABLE

LOCATION: BRONCOS HIGHWAY, BURRILLVILLE, RHODE ISLAND
ZONE: GC & A–80
USE: RETAIL

ITEM #	SEC. #	ITEM	REQUIREMENTS	EXISTING	PROPOSED
1	30–111	MIN. LOT AREA	80,000 sq. ft. (A–80)	80,000 sq. ft.	80,000 sq. ft.
2	30–111	MIN. WIDTH	300' (A–80)	364.1'	364.1'
3	30–111	MIN. FRONT SETBACK	55'	NA	108.84'
4	30–111	MIN. SIDE SETBACK	15'	NA	53.67'
5	30–111	MIN. REAR SETBACK	40' (A–80)	NA	43.91'
6	30–111	Maximum Building Coverage	15% (A–80)	NA	10,640/80,000=13.3%
7	30–111	MAX. BUILDING HEIGHT	35'	<35'	<35'
8		Parking requirement (RETAIL)	1 SPACE / 90 sq. ft.	NA	37 SPACES *

* – DENOTES VARIANCE GRANTED

SEE SHEET #6 FOR SITE NOTES

LEGEND

- EXISTING PROPERTY LINE
- EXISTING EDGE OF PAVEMENT
- I.P. FND. OR I.PIPE FND. — IRON PIN OR IRON PIPE FOUND
- C.M.S. FND. OR C.M.D. FND. — CONC. MERESTONE OR CHD FND.
- EXISTING TREE LINE
- TEL POLE # — EXISTING TELEPHONE POLE
- EXISTING BIT. CURB
- TP # — SOIL TEST LOCATION
- EXISTING FENCE
- PROPOSED TREE LINE
- PROPOSED BIT. CURB
- AREA OF LIGHT DUTY PAVEMENT
- AREA OF HEAVY DUTY PAVEMENT
- PROPOSED CONCRETE
- PROPOSED SNOW STORAGE

SCALE: 1"=20'	CHECKED BY: JPC
DATE: DEC. 28, 2023	DRAWN BY: JMP
JOB No.:3470	ACAD FILE: 3470–21–SI

SHEET: 2 OF: 15

REVISIONS:
MARCH 02, 2024 PER PEER REVIEW AND PLANNER COMMENTS

HALLISEY, PEARSON & CASSIDY
CIVIL ENGINEERS & LAND SURVEYORS
630 MAIN STREET, UNIT #1A
CROMWELL, CONNECTICUT 06416
PHONE: (860)–529–6812, FAX: (860)–721–7709

ZONING IMPROVEMENT LOCATION SURVEY-PROPOSED & SITE LAYOUT PLAN
PREPARED FOR
REBEL-UNION PARTNERS, LLC
PROPERTY LOCATED AT
BRONCOS HIGHWAY (RT. #102)
BURRILLVILLE, RHODE ISLAND

JOHN PAUL GARCIA
No. 7649
REGISTERED PROFESSIONAL ENGINEER CIVIL

BRONCOS HIGHWAY (RT. #102)

PROP. 18" F.E.
F.L.=289.50

PROP. U/G ELEC.

NET&T #96

NET&T #97

OVERHEAD WIRES

EDGE BIT. PAVE

TELE. POLE

N 74°38'33" E
364.10'

I.P. FND.
0.10' FROM PL

N/F
HARVEST TIME
A.P. 114, LOT 11

PROP. WELL

PROP. HEAVY DUTY PAVEMENT

PROP. SWQS #1
STORMCEPTOR 450I OR
EQUAL ON THE RI DEM
APPORVED LIST OF DEVICES.
TYPE "C"
T.F.=287.84
INV.(S)=285.84

N/F
2612 REALTY COMPANY LLC
52'-12" CLASS V RCP A.P. 114, LOT 13
@S=1.0%

35'-6" P.V.C. SAN. LAT.
@S=3.0%

S15°51'29"E
228.99'

PROP. CLEANOUT
INV.=285.95

17'-6" P.V.C. SAN. LAT.
@S=3.0%

PROP. CLEANOUT
INV.=285.44

PROP. 12" RCP F.E.
F.L. = 285.32

PROP. RIPRAP ENERGY DISSIPATOR
(SEE SHEET #14 FOR DETAIL)

PROP. C.B. #1
TYPE "C"
T.F.=288.09
INV.(S)=286.09

I.P. FND.
0.38' FROM PL

PROP. U/G ELEC.

MON. FND.
0.41' FROM PL

25' MIN.

PROP. 1" WAT. SERV.

PROP. 6' WIDE CONC. WALK

PROPOSED
ONE-STORY STEEL
RETAIL BUILDING
TOTAL FOOTPRINT AREA= 10,640 sq. ft.
8,845 sq. ft. SALES AREA
FIN. FLR.=290.00

INSTALL 8", 45° ELBOW
INV.=286.57

INSTALL 8"x8" TEE
INV.=286.29

INSTALL 8"x8" TEE
INV.=286.15

ROOF LEADER

15"-8" P.V.C. B.L.
@S=1.0%

14"-8" P.V.C. B.L.
@S=1.0%

PROP. INFILTRATION BASIN

6' HIGH CHAIN LINK FENCE

PROP. SEDIMENT FOREBAY
25% WQv (REQUIRED)= 0.0032 ac.ft.
25% WQv (PROVIDED)= 0.0201 ac.ft.

PROP. RIPRAP FILTRATION BERM
TOP OF BERM ELEV.= 288.0
(SEE DETAIL ON SHEET #15)

PROP. RIPRAP EMERGENCY SPILLWAY
CREST ELEV. = 288.00
(SEE SHEET #15 FOR DETAIL)

I.P. FND.
1.24' FROM PL

170'-6" P.V.C. SAN. LAT.
@S=5.0%

S15°51'29"E
64.55'

PROP. 15" SEWER ACCESS EASEMENT

PROP. CLEANOUT
INV.=276.84

BORING B-1
TOTAL DEPTH= 12'
NO STATIC GROUND WATER OBSERVED

BORING B-2
TOTAL DEPTH= 18'
NO STATIC GROUND WATER OBSERVED

PROP. 8" P.V.C. F.E.
F.L.=286.00

S74°42'34"W
335.33'

N/F
NASON SQUARE LLC
PARCEL "B"
REMAINING LAND OF
A.P. 114, LOT 12

PROP. SWQS #2
STORMCEPTOR 450I OR
EQUAL ON THE RI DEM
APPROVED LIST OF DEVICES.
TYPE "C"
T.F.=288.09
INV.(N)=285.70
INV.(S)=285.70

EXIST. WELL

76'-15" CLASS V RCP
@S=0.5%

25' PROTECTIVE BUFFER FROM HISTORIC CEMETERY

EXIST. HISTORIC CEMETERY #39 ENCLOSED WITH GRANITE POSTS

10' WIDE EASEMENT

PROP. U/G ELEC.

PROP. TRANSFORMER

N/F
DBH REALTY, LLC
A.P. 114, LOT 13

LOT AREA=
80,006 sq. ft.
1.836 acres

N23°01'25"W
223.15'

PROP. 15" RCP F.E.
F.L. = 285.32

PROP. RIPRAP ENERGY DISSIPATOR
(SEE SHEET #14 FOR DETAIL)

PROP. SEDIMENT FOREBAY
25% WQv (REQUIRED)= 0.005 ac.ft.
25% WQv (PROVIDED)= 0.0984 ac.ft.

I.P. FND.
0.20' FROM PL

I.P. FND.
1.78' FROM PL

N23°01'25"W
7.50'

PROP. RIPRAP FILTRATION BERM
TOP OF BERM ELEV.= 288.0
(SEE DETAIL ON SHEET #15)

26'x18' CONCRETE
DELIVERY PAD

18' x 18' CONCRETE DUMPSTER PAD W/
18' x 12' CHAINLINK FENCE ENCLOSURE
AREA WITH (2) 6 CU. YD.. DUMPSTERS
(SEE DTAIL ON SHEET #15)

NORTH

GRAPHIC SCALE
20 0 10 20 40 80
(IN FEET)
1 inch = 20 ft.

SEE SHEET #6 FOR SITE NOTES

LEGEND

- EXISTING PROPERTY LINE
- EXISTING EDGE OF PAVEMENT
- I.P. FND. OR I.PIPE FND. — IRON PIN OR IRON PIPE FOUND
- C.M.S. FND. OR C.H.D. FND. — CONC. MERESTONE OR CHD FND.
- EXISTING TREE LINE
- 412 — EXISTING CONTOUR
- x 134.4 — EXISTING SPOT GRADE
- POLE — EXISTING TELEPHONE POLE
- C.B. PIPE (SIZE, TYPE) — EXISTING BIT. CURB
- C.B. PIPE (SIZE, TYPE) — EXISTING STORM DRAINAGE SYSTEM
- EXISTING WATER MAIN
- TP — SOIL TEST LOCATION
- EXISTING FENCE
- C.B. PIPE (SIZE, TYPE) — PROPOSED STORM DRAINAGE SYSTEM
- PROPOSED WATER MAIN
- 412 — PROPOSED CONTOUR
- 412.9 — PROPOSED SPOT GRADE
- PROPOSED TREE LINE
- PROPOSED BIT. CURB
- AREA OF LIGHT DUTY PAVEMENT
- AREA OF HEAVY DUTY PAVEMENT
- PROPOSED CONCRETE

SCALE: 1"=20'
DATE: DEC. 28, 2023
JOB No.:3470
CHECKED BY: JPC
DRAWN BY: JMP
ACAD FILE: 3470-SG
SHEET: 3 OF: 15
REVISIONS:
MARCH 02, 2024 PER PEER REVIEW AND PLANNER COMMENTS

HALLISEY, PEARSON & CASSIDY
CIVIL ENGINEERS & LAND SURVEYORS
630 MAIN STREET, UNIT #1A
CROMWELL, CONNECTICUT 06416
PHONE: (860)-529-6812, FAX: (860)-721-7709

SITE GRADING & DRAINAGE PLAN
PREPARED FOR
REBEL-UNION PARTNERS, LLC
PROPERTY LOCATED AT
BRONCOS HIGHWAY (RT. #102)
BURRILLVILLE, RHODE ISLAND

JOHN PAUL GARCIA
No. 7649
REGISTERED PROFESSIONAL ENGINEER
CIVIL

BRONCOS HIGHWAY (RT. #102)

NORTH

PROPOSED ONE-STORY STEEL RETAIL BUILDING
TOTAL FOOTPRINT AREA= 10,640 sq. ft.
8,845 sq. ft. SALES AREA

PROP. INFILTRATION BASIN

LOT AREA= 80,006 sq. ft. 1.836± acres

N/F
HARVEST TIME
A.P. 114, LOT 11

N/F
2612 REALTY COMPANY LLC
A.P. 114, LOT 13

N/F
DBH REALTY, LLC
A.P. 114, LOT 13

N/F
NASON SQUARE LLC
PARCEL "B"
REMAINING LAND OF
A.P. 114, LOT 12

MATCHLINE (SEE SHEET 4B)

SEE SHEET #6 FOR SITE NOTES

LEGEND

- EXISTING PROPERTY LINE
- EXISTING EDGE OF PAVEMENT
- I.P. FND. OR I.PIPE FND. — IRON PIN OR IRON PIPE FOUND
- C.M.S. FND. OR C.M.D. FND. — CONC. MERESTONE OR CHD FND.
- EXISTING TREE LINE
- x 134.4 — EXISTING SPOT GRADE
- EXISTING TELEPHONE POLE
- EXISTING BIT. CURB
- EXISTING STORM DRAINAGE SYSTEM
- EXISTING WATER MAIN
- SOIL TEST LOCATION
- EXISTING FENCE
- PROPOSED STORM DRAINAGE SYSTEM
- PROPOSED WATER MAIN
- 412.9 — PROPOSED SPOT GRADE
- PROPOSED TREE LINE
- PROPOSED BIT. CURB
- AREA OF LIGHT DUTY PAVEMENT
- AREA OF HEAVY DUTY PAVEMENT
- PROPOSED CONCRETE

GRAPHIC SCALE
20 0 10 20 40 80
(IN FEET)
1 inch = 20 ft.

SCALE: 1"=20'
DATE: DEC. 28, 2023
JOB No.: 3470
CHECKED BY: JPC
DRAWN BY: JMP
ACAD FILE: 3470-SU
SHEET: 4A OF: 15
REVISIONS:
MARCH 02, 2024 PER PEER REVIEW AND PLANNER COMMENTS

HALLISEY, PEARSON & CASSIDY
CIVIL ENGINEERS & LAND SURVEYORS
630 MAIN STREET, UNIT #1A
CROMWELL, CONNECTICUT 06416
PHONE: (860)-529-6812, FAX: (860)-721-7709

SITE UTILITIES PLAN
PREPARED FOR
REBEL-UNION PARTNERS, LLC
PROPERTY LOCATED AT
BRONCOS HIGHWAY (RT. #102)
BURRILLVILLE, RHODE ISLAND

JOHN PAUL GARCIA
No. 7649
REGISTERED PROFESSIONAL ENGINEER CIVIL

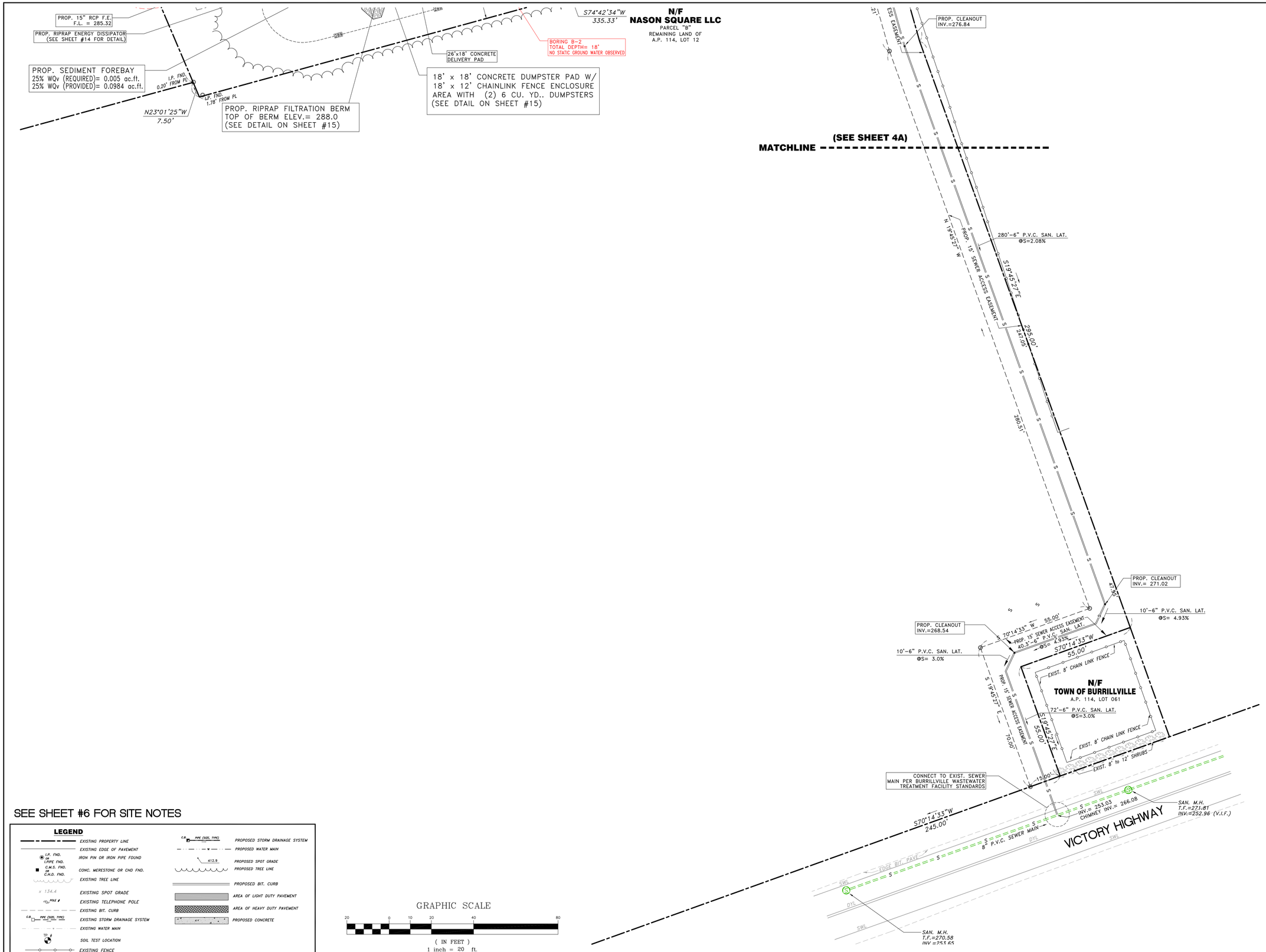

SEE SHEET #6 FOR SITE NOTES

LEGEND

- EXISTING PROPERTY LINE
- EXISTING EDGE OF PAVEMENT
- I.P. FND. OR I.PIPE FND. — IRON PIN OR IRON PIPE FOUND
- C.M.S. FND. OR C.H.D. FND. — CONC. MERESTONE OR CHD FND.
- EXISTING TREE LINE
- x 134.4 — EXISTING SPOT GRADE
- EXISTING TELEPHONE POLE
- EXISTING BIT. CURB
- C.B. PIPE (SIZE, TYPE) — EXISTING STORM DRAINAGE SYSTEM
- EXISTING WATER MAIN
- TP # — SOIL TEST LOCATION
- EXISTING FENCE
- C.B. PIPE (SIZE, TYPE) — PROPOSED STORM DRAINAGE SYSTEM
- PROPOSED WATER MAIN
- 412.9 — PROPOSED SPOT GRADE
- PROPOSED TREE LINE
- PROPOSED BIT. CURB
- AREA OF LIGHT DUTY PAVEMENT
- AREA OF HEAVY DUTY PAVEMENT
- PROPOSED CONCRETE

GRAPHIC SCALE

20 0 10 20 40 80

(IN FEET)
1 inch = 20 ft.

SCALE: 1"=20'
DATE: DEC. 28, 2023
JOB No.:3470
CHECKED BY: JPC
DRAWN BY: JMP
ACAD FILE: 3470-SU
SHEET: 4B OF: 15
REVISIONS:
MARCH 02, 2024 PER PEER REVIEW AND PLANNER COMMENTS

HALLISEY, PEARSON & CASSIDY
CIVIL ENGINEERS & LAND SURVEYORS
630 MAIN STREET, UNIT #1A
CROMWELL, CONNECTICUT 06416
PHONE: (860)-529-6812, FAX: (860)-721-7709

SITE UTILITIES PLAN
PREPARED FOR
REBEL-UNION PARTNERS, LLC
PROPERTY LOCATED AT
BRONCOS HIGHWAY (RT. #102)
BURRILLVILLE, RHODE ISLAND

JOHN PAUL GARCIA
No. 7649
REGISTERED PROFESSIONAL ENGINEER
CIVIL

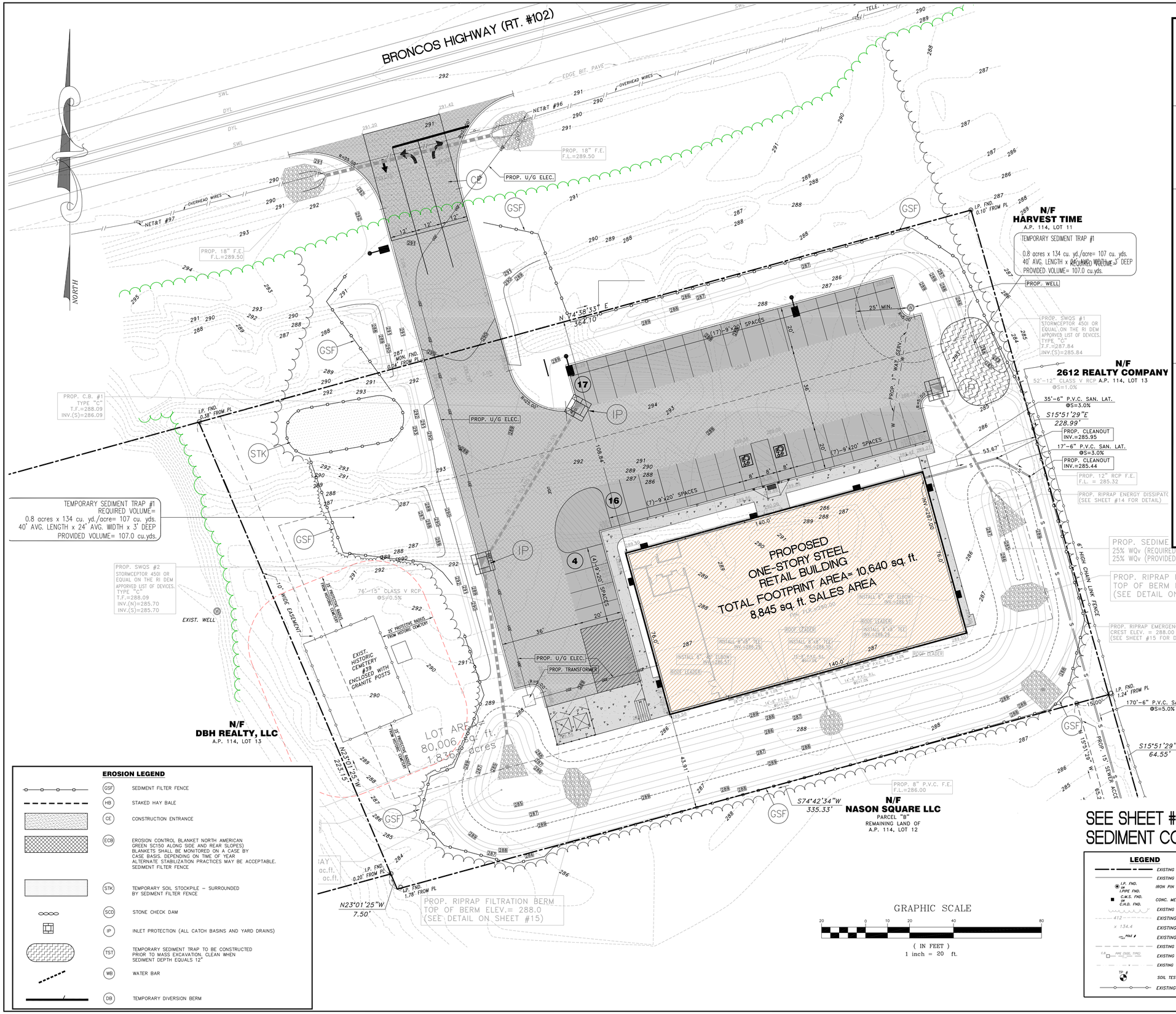

EROSION CONTROL MEASURE	CONTROL OBJECTIVE	INSPECTION/MAINTENANCE	FAILURE INDICATORS	REMOVAL
TEMPORARY SEDIMENT TRAP (TST)	-RETAIN SEDIMENT-LADEN RUNOFF FROM SMALL DISTURBED AREAS UNTIL SUFFICIENT MAJORITY OF THE SEDIMENT TO SETTLE OUT	INSPECT AT LEAST ONCE A WEEK AND WITHIN 24 HOURS OF THE END OF A STORM WITH A RAINFALL OF 0.5 INCHES OR GREATER. CLEAN OUT SEDIMENT WHEN ACCUMULATION EXCEEDS BELOW CREST OF EMBANKMENT. SEDIMENT MUST BE REMOVED WHEN ACCUMULATION EXCEEDS 1/2 OF THE REQUIRED WET STORAGE.	-TURBID WATER -EXCESSIVE SEDIMENT ACCUMULATION -EROSION OF EMBANKMENT -OVERTOPPING EVIDENCE	TST MAY BE REMOVED ONCE THE TRIBUTARY AREA HAS BEEN STABILIZED.
TEMPORARY SEDIMENT BASIN (DETENTION BASIN) (SB/PST)	-RETAIN SEDIMENT-LADEN RUNOFF FROM LARGE DISTURBED AREAS UNTIL SUFFICIENT MAJORITY OF SEDIMENT TO SETTLE OUT -PREVENT TRANSPORT AND DEPOSITION OF SEDIMENT ONTO ADJACENT PROPERTIES, ETC.	-INSPECT/RETAIN SEDIMENT DURING CONSTRUCTION, PREVENT TRANSPORT AND DEPOSITION OF SEDIMENT ONTO ADJACENT PROPERTIES, ETC.	-TURBID WATER -EXCESSIVE SEDIMENT ACCUMULATION -EROSION OF EMBANKMENTS	TEMPORARY SEDIMENT BASIN THAT ARE NOT TO FUNCTION AS PERMANENT WET POND MUST BE REMOVED ONCE THE TRIBUTARY AREA HAS BEEN STABILIZED.
SILT FENCE (GSF) (RELATED: IP/STK)	-INTERCEPT/RETAIN SEDIMENT-LADEN RUNOFF FROM SMALL DISTURBED AREAS UNTIL SUFFICIENT MAJORITY OF SEDIMENT TO SETTLE OUT -DECREASE VELOCITY OF SHEET FLOW -PREVENT EXCESSIVE SURFACE SCOUR FROM EXCESSIVE WATER FLOW.	-INSPECT AND REDIRECT/RETAIN SMALL AMOUNTS OF SEDIMENT DURING CONSTRUCTION, PREVENT TRANSPORT AND DEPOSITION OF SEDIMENT ONTO ADJACENT PROPERTIES, ETC.	-PHYSICAL DAMAGE OR DECOMPOSITION -SEDIMENT ACCUMULATION EXCEEDING HALF THE FENCE HEIGHT -EVIDENCE OF SIGNIFICANT FLOWS EXCEEDING CAPACITY. -REPETITIVE FAILURE	SILT FENCE MAY BE REMOVED AFTER TRIBUTARY AREA HAS BEEN STABILIZED.
HAY BALES (HB)	-INTERCEPT AND REDIRECT/RETAIN SMALL AMOUNTS OF SEDIMENT-LADEN RUNOFF FROM SMALL DISTURBED AREAS -DECREASE VELOCITY OF SHEET FLOW -PREVENT EXCESSIVE SURFACE SCOUR FROM EXCESSIVE WATER FLOW.	-INSPECT AT LEAST ONCE A WEEK AND WITHIN 24 HOURS OF THE END OF A STORM WITH A RAINFALL OF 0.5 INCHES OR GREATER. REPAIR OR REPLACE AS NECESSARY. INSPECT FREQUENTLY DURING PUMPING OPERATIONS.	-PHYSICAL DAMAGE OR DECOMPOSITION -SEDIMENT ACCUMULATION EXCEEDING HALF THE HEIGHT OF THE BALE -EVIDENCE OF SIGNIFICANT FLOWS EXCEEDING CAPACITY. -REPETITIVE FAILURE	HAY BALES MAY BE REMOVED AFTER TRIBUTARY AREA HAS BEEN STABILIZED.
TEMPORARY DIVERSION DIKE (TDD) TEMPORARY SWALE (TSW) OR WATER BAR (WB)	-PREVENT SHEET FLOW CONVERTING TO CONCENTRATED FLOW ACCELERATING DOWNSLOPE WITHOUT ADEQUATE CONTROL -DIVERT WATER ORIGINATING FROM UNDISTURBED AREA AWAY FROM CONSTRUCTION.	-INSPECT AT LEAST ONCE A WEEK AND WITHIN 24 HOURS OF THE END OF A STORM WITH A RAINFALL OF 0.5 INCHES OR GREATER. REPAIR OR REPLACE AS NECESSARY. INSPECT FREQUENTLY DURING PUMPING OPERATIONS.	-PHYSICAL DAMAGE -EVIDENCE OF SIGNIFICANT FLOWS EXCEEDING CAPACITY. -REPETITIVE FAILURE	TEMPORARY DIVERSIONS MAY BE REMOVED AFTER TRIBUTARY AREA HAS BEEN STABILIZED.
CONSTRUCTION ENTRANCE (CE)	-REDUCE THE TRACKING OF SEDIMENT OFF-SITE ONTO PAVED SURFACES.	-INSPECT AT THE END OF EACH WORK DAY AND IMMEDIATELY REPAIR DAMAGED CONDITIONS. REPAIR OR REPLACE AS NECESSARY. PERIODICALLY REMOVE SEDIMENT FROM THE CONSTRUCTION ENTRANCE AS NECESSARY TO MAINTAIN ITS EFFECTIVENESS.	-SEDIMENT IN ROADWAY ADJACENT TO SITE	CONSTRUCTION ENTRANCE MAY BE REMOVED AFTER TRIBUTARY AREA HAS BEEN STABILIZED, AND ALL SECTIONS OF ROADWAY ADJACENT TO SITE HAVE BEEN CLEANED.
CATCH BASIN INLET PROTECTION (IP)	-PREVENT SILT & CONSTRUCTION RELATED RUNOFF FROM ENTERING STORM DRAINAGE SYSTEM.	-INSPECT AT LEAST ONCE A WEEK AND WITHIN 24 HOURS OF THE END OF A STORM WITH A RAINFALL OF 0.5 INCHES OR GREATER. REPAIR OR REPLACE AS NECESSARY. REMOVE SEDIMENT FROM BAL-CHECK SURROUNDING SILT FENCE AND ANY BALES PER MANUFACTURER'S RECOMMENDATIONS.	-FAILED BALE/SILT FENCE -SEDIMENT ACCUMULATION IN STORM DRAINAGE SYSTEM DITCHES.	INSPECT BAL-CHECK/SILT FENCE AFTER TRIBUTARY AREA HAS BEEN STABILIZED, AND IF SEDIMENT HAS BEEN PERMANENTLY PAVED.
STOCKPILE PROTECTION (STK)	-RETAIN SOIL TO/DOWNSLOPE OF LOCATIONS SPECIFIED AND REDUCE WATER TRANSPORT.	-INSPECT SILT FENCE AT THE END OF EACH WORK DAY FOR IMPROPERLY REPAIR DAMAGES. PERIODIC REIMPLACEMENT OF SOIL TRACK, OR ADDITION OF ANY BALES MAY BE NECESSARY.	-SEDIMENT ACCUMULATION ON THE DOWNSLOPE SIDE OF THE STOCKPILE IS LESS OR ELIMINATED	REMOVE STOCKPILE AFTER TRIBUTARY AREA HAS BEEN STABILIZED.
DUST PROTECTION (DC)	-TO PREVENT MOVEMENT OF DUST FROM EXPOSED SOIL SURFACES TO ADJACENT PROPERTIES AND SURROUNDING AREAS. DUST CAN BE A HEALTH HAZARD TO HUMANS, DAMAGE PLANTS, AND REDUCE VISIBILITY, RESULTING IN HAZARDOUS TRAFFIC VISIBILITY.	-OBSERVE DUST DURING CONSTRUCTION. IF DUST IS MOVING OFF SITE, APPLY MORE WATER. IF MOISTEN MATERIAL TRAVELS, WAITS TO CONTROL DUST MAY RESULT IN DUST EVENTS.	-EVIDENCE OF DUST ON ADJACENT PROPERTIES AND SURROUNDING AREAS -AIRBORNE DUST	REPEAT APPLICATION OF DUST CONTROL. STABILIZED, WETTED, AND MULCHED AREAS MAY BE LEFT ALONE IF THERE IS NO DUST.

EROSION LEGEND

	GSF	SEDIMENT FILTER FENCE
	HB	STAKED HAY BALE
	CE	CONSTRUCTION ENTRANCE
	ECB	EROSION CONTROL BLANKET NORTH AMERICAN GREEN SC150 ALONG SIDE AND REAR SLOPES) BLANKETS SHALL BE MONITORED ON A CASE BY CASE BASIS. DEPENDING ON TIME OF YEAR ALTERNATE STABILIZATION PRACTICES MAY BE ACCEPTABLE. SEDIMENT FILTER FENCE
	STK	TEMPORARY SOIL STOCKPILE – SURROUNDED BY SEDIMENT FILTER FENCE
	SCD	STONE CHECK DAM
	IP	INLET PROTECTION (ALL CATCH BASINS AND YARD DRAINS)
	TST	TEMPORARY SEDIMENT TRAP TO BE CONSTRUCTED PRIOR TO MASS EXCAVATION. CLEAN WHEN SEDIMENT DEPTH EQUALS 12"
	WB	WATER BAR
	DB	TEMPORARY DIVERSION BERM

LEGEND

EXISTING PROPERTY LINE	PROPOSED STORM DRAINAGE SYSTEM
EXISTING EDGE OF PAVEMENT	PROPOSED WATER MAIN
I.P. FND. or I.PIPE FND. — IRON PIN OR IRON PIPE FOUND	412 — PROPOSED CONTOUR
C.M.S. FND. or C.M.D. FND. — CONC. MERESTONE OR CHD FND.	412.9 — PROPOSED SPOT GRADE
EXISTING TREE LINE	PROPOSED TREE LINE
412 — EXISTING CONTOUR	PROPOSED BIT. CURB
x 134.4 — EXISTING SPOT GRADE	AREA OF LIGHT DUTY PAVEMENT
POLE — EXISTING TELEPHONE POLE	AREA OF HEAVY DUTY PAVEMENT
EXISTING BIT. CURB	PROPOSED CONCRETE
C.B. PIPE (SIZE, TYPE) — EXISTING STORM DRAINAGE SYSTEM	
EXISTING WATER MAIN	
TP # — SOIL TEST LOCATION	
EXISTING FENCE	

SEE SHEET #7 FOR EROSION + SEDIMENT CONTROL NOTES

HALLISEY, PEARSON & CASSIDY
CIVIL ENGINEERS & LAND SURVEYORS
630 MAIN STREET, UNIT #1A
CROMWELL, CONNECTICUT 06416
PHONE: (860)-529-6812, FAX: (860)-721-7709

SITE EROSION & SEDIMENT CONTROL PLAN
PREPARED FOR
REBEL-UNION PARTNERS, LLC
PROPERTY LOCATED AT
BRONCOS HIGHWAY (RT. #102)
BURRILLVILLE, RHODE ISLAND

SCALE: 1"=20'
DATE: DEC. 28, 2023
JOB No.:3470
SHEET: 5 OF: 15
CHECKED BY: JPC
DRAWN BY: JMP
ACAD FILE: 3470-ES
REVISIONS:
MARCH 12, 2024 PER PEER REVIEW AND PLANNER COMMENTS

JOHN PAUL GARCIA
No. 7649
REGISTERED PROFESSIONAL ENGINEER CIVIL

SITE PLAN NOTES

1. ALL CONSTRUCTION SHALL COMPLY WITH TOWN OF BURRILLVILLE, STATE OF RHODE ISLAND DEPARTMENT OF TRANSPORTATION STANDARDS AND SPECIFICATIONS IN THE ABOVE REFERENCED HIERARCHY. IF SPECIFICATIONS ARE IN CONFLICT, THE MORE STRINGENT SPECIFICATION SHALL APPLY. ALL CONSTRUCTION SHALL BE PERFORMED IN ACCORDANCE WITH ALL APPLICABLE OSHA, FEDERAL, STATE AND LOCAL REGULATIONS.

2. THE OWNER IS RESPONSIBLE FOR OBTAINING ALL NECESSARY ZONING PERMITS REQUIRED BY GOVERNMENT AGENCIES PRIOR TO CONSTRUCTION. THE CONTRACTOR SHALL OBTAIN ALL TOWN CONSTRUCTION PERMITS, INCLUDING DOT PERMITS AND SEWER AND WATER CONNECTION PERMITS. THE CONTRACTOR SHALL POST ALL BONDS, PAY ALL FEES, PROVIDE PROOF OF INSURANCE AND PROVIDE TRAFFIC CONTROL NECESSARY FOR THIS WORK.

3. REFER TO OTHER PLANS, DETAILS AND NOTES FOR ADDITIONAL INFORMATION. THE CONTRACTOR SHALL VERIFY ALL SITE CONDITIONS IN THE FIELD AND CONTACT THE SITE ENGINEER IF THERE ARE ANY QUESTIONS OR CONFLICTS REGARDING THE CONSTRUCTION DOCUMENTS AND/OR FIELD CONDITIONS SO THAT APPROPRIATE REVISIONS CAN BE MADE PRIOR TO BIDDING. ANY CONFLICT BETWEEN THE DRAWINGS AND SPECIFICATIONS SHALL BE CONFORMED WITH THE LOCAL CONSTRUCTION MANAGER PRIOR TO BIDDING.

4. THE CONTRACTOR SHALL SUBMIT SHOP DRAWINGS OF ALL PRODUCTS, MATERIALS AND PLAN SPECIFICATIONS TO THE OWNER AND SITE ENGINEER FOR REVIEW AND APPROVAL PRIOR TO FABRICATION OR DELIVERY TO THE SITE. ALLOW A MINIMUM OF 14 WORKING DAYS FOR REVIEW.

5. THE CONTRACTOR SHALL FOLLOW THE SEQUENCE OF CONSTRUCTION NOTES PROVIDED ON THE EROSION CONTROL PLAN.

6. THE CONTRACTOR SHALL REFERENCE ARCHITECTURAL PLANS FOR EXACT DIMENSIONS AND CONSTRUCTION DETAILS OF BUILDING, OUTSIDE DISPLAY AREA, AND THE RAISED CONCRETE SIDEWALKS AND RAMPS.

7. SHOULD ANY UNCHARTED OR INCORRECTLY CHARTED, EXISTING PIPING OR OTHER UTILITY BE UNCOVERED DURING EXCAVATION, CONSULT THE ENGINEER IMMEDIATELY FOR DIRECTIONS BEFORE PROCEEDING FURTHER WITH WORK IN THIS AREA.

8. DO NOT INTERRUPT EXISTING UTILITIES SERVICING FACILITIES OCCUPIED AND USED BY THE OWNER OR OTHERS DURING OCCUPIED HOURS EXCEPT WHEN SUCH INTERRUPTIONS HAVE BEEN AUTHORIZED IN WRITING BY THE OWNER AND THE LOCAL MUNICIPALITIES. INTERRUPTIONS SHALL ONLY OCCUR AFTER ACCEPTABLE TEMPORARY SERVICE HAS BEEN PROVIDED.

9. ALL SITE DIMENSIONS ARE REFERENCED TO THE FACE OF CURBS OR EDGE OR PAVING UNLESS OTHERWISE NOTED. ALL BUILDING DIMENSIONS ARE REFERENCED TO THE OUTSIDE FACE OF THE STRUCTURE.

10. THE CONTRACTOR SHALL PROVIDE AND MAINTAIN TRAFFIC DEVICES FOR PROTECTION OF VEHICLES AND PEDESTRIANS CONSISTING OF DRUMS, BARRIERS, SIGNS, LIGHTS, FENCES, TRAFFIC CONTROLLERS AND UNIFORMED TRAFFIC OFFICERS AS REQUIRED, ORDERED BY THE ENGINEER OR REQUIRED BY THE LOCAL GOVERNING AUTHORITIES.

11. REFER TO DETAIL SHEETS FOR PAVEMENT, CURBING, AND SIDEWALK INFORMATION.

12. TRAFFIC CONTROL SIGNAGE SHALL CONFORM TO THE STATE DOT STANDARD DETAIL SHEETS AND THE MANUAL OF UNIFORM TRAFFIC CONTROL DEVICES. SIGNS SHALL BE INSTALLED PLUMB WITH THE EDGE OF THE SIGN 2' OFF THE FACE OF THE CURB, AND WITH 7' VERTICAL CLEARANCE UNLESS OTHERWISE DETAILED OR NOTED.

13. THE CONTRACTOR SHALL ABIDE BY ALL OSHA FEDERAL STATE AND LOCAL REGULATIONS WHEN OPERATING CRANES, BOOMS, HOISTS, ETC. IN CLOSE PROXIMITY TO OVERHEAD ELECTRIC LINES. IF CONTRACTOR MUST OPERATE EQUIPMENT CLOSE TO ELECTRIC LINES, CONTACT POWER COMPANY TO MAKE ARRANGEMENTS FOR PROPER SAFEGUARDS. ANY UTILITY COMPANY FEES SHALL BE PAID FOR BY THE CONTRACTOR.

14. THE CONTRACTOR SHALL SUBMIT A SHOP DRAWING OF THE PAINT MIXTURE PRIOR TO STRIPING.

15. PAVEMENT MARKING KEY:

4" SYDL	4' SOLID YELLOW DOUBLE LINE
4" SYL	4' SOLID YELLOW LINE
4" SWL	4" SOLID WHITE LINE
12" SWSB	12" SOLID WHITE STOP BAR
4" BWL	4" BROKEN WHITE LINE 10' STRIPE 30' SPACE

16. PARKING SPACES SHALL BE STRIPED WITH 4" SWL; HATCHED AREA SHALL BE STRIPED WITH 4' SWL AT A 45° ANGLE, 2' ON CENTER. HATCHING SYMBOLS, AND STRIPING FOR HANDICAPPED SPACES SHALL BE PAINTED BLUE. OTHER MARKINGS SHALL BE PAINTED WHITE OR AS NOTED.

17. THE CONTRACTOR SHALL RESTORE ANY DRAINAGE STRUCTURE, PIPE, UTILITY, PAVEMENT, CURBS, SIDEWALKS, LANDSCAPED AREAS OR SIGNAGE DISTURBED DURING CONSTRUCTION TO THEIR ORIGINAL CONDITION OR BETTER, AS APPROVED BY THE ENGINEER.

18. THE CONTRACTOR SHALL PROVIDE AS-BUILT RECORDS OF ALL CONSTRUCTION (INCLUDING UNDERGROUND UTILITIES) TO THE OWNER AT THE END OF CONSTRUCTION.

19. THE ARCHITECT OR ENGINEER IS NOT RESPONSIBLE FOR SITE SAFETY MEASURES TO BE EMPLOYED DURING CONSTRUCTION. THE ARCHITECT AND ENGINEER HAVE NO CONTRACTUAL DUTY TO CONTROL THE SAFEST METHODS OR MEANS OF THE WORK, JOB SITE RESPONSIBILITIES, SUPERVISION OR TO SUPERVISE SAFETY AND DOES NOT VOLUNTARILY ASSUME ANY SUCH DUTY OR RESPONSIBILITY.

20. THE CONTRACTOR SHALL COMPLY WITH CFR 29 PART 1926 FOR EXCAVATION TRENCHING AND TRENCH PROTECTION REQUIREMENTS..

21. ALTERNATIVE METHODS AND PRODUCTS OTHER THAN THOSE SPECIFIED MAY BE USED IF REVIEWED AND APPROVED BY THE OWNER, SITE ENGINEER, AND APPROPRIATE REGULATORY AGENCY PRIOR TO INSTALLATION DURING THE BIDDING PROCESS.

22. INFORMATION ON EXISTING UTILITIES AND STORM DRAINAGE SYSTEMS HAS BEEN COMPILED FROM AVAILABLE INFORMATION INCLUDING UTILITY COMPANY AND MUNICIPAL RECORD MAPS AND/OR FIELD SURVEY AND IS NOT GUARANTEED CORRECT OR COMPLETE. UTILITIES AND STORM DRAINAGE SYSTEMS ARE SHOWN TO ALERT THE CONTRACTOR TO THEIR PRESENCE AND THE CONTRACTOR IS SOLELY RESPONSIBLE FOR DETERMINING ACTUAL LOCATIONS AND ELEVATIONS OF ALL UTILITIES AND STORM DRAINAGE SYSTEMS INCLUDING SERVICES. PRIOR TO DEMOLITION OR CONSTRUCTION, THE CONTRACTOR SHALL CONTACT "CALL BEFORE YOU DIG" 72 HOURS BEFORE COMMENCEMENT OF WORK AT "1(800)922-4455" AND VERIFY ALL UTILITY AND STORM DRAINAGE SYSTEM LOCATIONS.

23. PAVEMENT MARKINGS SHALL BE HOT APPLIED TYPE IN ACCORDANCE WITH CT DOT SPECIFICATIONS, UNLESS WHERE EPOXY RESIGN PAVEMENT MARKINGS ARE INDICATED.

24. RI DOT ENCROACHMENT PERMIT SHALL BE OBTAINED BY CONTRACTOR WHO SHALL POST ALL BONDS, PAY ALL FEES, PROVIDE PROOF OF INSURANCE AND PROVIDE TRAFFIC PROTECTION NECESSARY FOR THE WORK.

25. AN EROSION CONTROL BOND IS REQUIRED TO BE POSTED BY THE CONTRACTOR BEFORE THE START OF ANY ACTIVITY ON OR OFF SITE.

26. THESE PLANS ARE FOR PERMITTING PURPOSES ONLY AND ARE NOT FOR CONSTRUCTION. NO CONSTRUCTION OR DEMOLITION SHALL BEGIN UNTIL APPROVAL OF THE FINAL PLANS IS GRANTED BY ALL GOVERNING AND REGULATORY AGENCIES.

28. THESE PLANS ARE FOR PERMITTING.

29. THE SITE IS PROPOSED TO BE SERVICED BY WELL AND PUBLIC SEWER SYSTEM.

30. PROPERTY SHOWN ON F.I.R.M. NO. 44007C0151G. DATED: MARCH 2, 2009.
THE PORTION OF THIS PROPORTY THAT IS BEING DEVELOPED IS IN A FLOOD ZONE "X".

31. 12" SWSB (STOP BAR) AND 4" SYDL AND SWL PAVEMENT MARKINGS LOCATED IN DRIVEWAYS AND IN STATE HIGHWAY SHALL BE EPOXY RESIN TYPE ACCORDING TO CT DOT SPECIFICATIONS.

32. FIRE LANES SHALL BE ESTABLISHED AND PROPERLY DESIGNATED IN ACCORDANCE WITH THE REQUIREMENTS OF THE TOWN FIRE MARSHAL.

33. THE APPLICANT WILL PROVIDE AND MAINTAIN ADEQUATE SIGHT DISTANCES AT ALL DRIVEWAY INTERSECTIONS. CURRENT STATE OF RHODE ISLAND HIGHWAY DESIGN STANDARDS WILL APPLY TO REQUIRED SIGHT DISTANCES.

34. THE APPLICANT WILL REGISTER BUILDING ALARMS PER TOWN ORDINANCE.

35. THE APPLICANT WILL CONTROL DUST AND DEBRIS ON THE SURROUNDING ROADWAYS DURING CONSTRUCTION. PROPER SAFETY PRECAUTIONS AND EQUIPMENT ARE TO BE UTILIZED WHEN WORKING ON PUBLIC ROADWAYS AND ARE THE APPLICANT'S RESPONSIBILITY TO PROVIDE.

36. THE APPLICANT WILL OBTAIN A RHODE ISLAND DEPARTMENT OF TRANSPORTATION ENCROACHMENT PERMIT FOR ANY WORK DONE IN THE STATE RIGHT OF WAY.

37. THE APPLICANT MUST COMPLY WITH RHODE ISLAND DEPARTMENT OF TRANSPORTATION STIPULATIONS/REGULATIONS WHEN APPLICABLE.

38. ALL DISTURBED PAVEMENT MARKINGS MUST BE REPLACED WITH EPOXY PAINT.

GRADING AND DRAINAGE NOTES

GRADING GENERAL NOTES:

1. SEE THIS PLAN SHEET FOR ADDITIONAL SITE PLAN AND GENERAL NOTES.

2. THE GRADING AND DRAINAGE PLAN IS INTENDED TO DESCRIBE GRADING AND DRAINAGE ONLY. REFER TO SITE PLAN FOR GENERAL INFORMATION, AND DETAIL SHEETS FOR DETAILS. SEE MEP DRAWINGS FOR BUILDING CONNECTION LOCATIONS AND DETAILS.

3. THE CONTRACTOR SHALL PRESERVE EXISTING VEGETATION WHERE POSSIBLE AND/OR AS NOTED ON DRAWINGS. REFER TO EROSION CONTROL PLAN FOR LIMIT OF DISTURBANCE AND NOTES.

4. TOPSOIL SHALL BE STRIPPED AND STOCKPILED FOR USE IN FINAL LANDSCAPING.

5. THE CONTRACTOR IS RESPONSIBLE FOR OBTAINING ALL NECESSARY PERMITS REQUIRED BY GOVERNMENT AND LOCAL AGENCIES PRIOR TO CONSTRUCTION. THE CONTRACTOR SHALL OBTAIN ALL NECESSARY PERMITS FROM THE LOCAL MUNICIPALITIES REQUIRED TO PERFORM ALL REQUIRED WORK, INCLUDING FOR STREET CUTS AND CONNECTIONS TO EXISTING UTILITIES. THE CONTRACTOR SHALL POST ALL BONDS, PAY ALL FEES, PROVIDE PROOF OF INSURANCE AND PROVIDE TRAFFIC CONTROL NECESSARY FOR THIS WORK.

6. THE CONTRACTOR SHALL PROVIDE AND MAINTAIN TRAFFIC DEVICES FOR PROTECTION OF VEHICLES AND PEDESTRIANS CONSISTING OF DRUMS, BARRIERS, SIGNS, LIGHTS FENCES AND UNIFORMED TRAFFIC CONTROLLERS AS REQUIRED, ORDERED BY THE ENGINEER OR REQUIRED BY THE STATE AND LOCAL GOVERNING AUTHORITIES.

7. THE CONTRACTOR SHALL COMPACT FILL IN 12" MAXIMUM LIFTS UNDER ALL PARKING, BUILDING, AND DRIVE AREAS TO 95% OF THE MAXIMUM DRY DENSITY AS DETERMINED BY ASTM D1557 (MODIFIED PROCTOR TEST), OR AS DIRECTED BY THE GEOTECHNICAL ENGINEER.

8. UNDERDRAINS SHALL BE ADDED, IF DETERMINED NECESSARY IN THE FIELD BY THE DESIGN OR TOWN ENGINEER AFTER SUBGRADE IS ROUGH GRADED, AS APPROVED BY THE BURRILLVILLE TOWN STAFF.

9. VERTICAL DATUM IS NAVD 1988.

10. CLEARING LIMITS SHALL BE PHYSICALLY MARKED IN THE FIELD AND APPROVED BY THE TOWN OF BURRILLVILLE AGENT PRIOR TO THE START OF WORK ON THE SITE.

11. PROPER CONSTRUCTION PROCEDURES SHALL BE FOLLOWED ON ALL IMPROVEMENTS WITHIN THIS PARCEL SO AS TO PREVENT THE SILTING OF ANY WATERCOURSE OR WETLANDS IN ACCORDANCE WITH THE REGULATIONS OF THE DEPARTMENT OF ENVIRONMENTAL PROTECTION GUIDELINES FOR SOIL EROSION AND SEDIMENT POLLUTION CONTROL. IN ADDITION, THE CONTRACTOR SHALL STRICTLY ADHERE TO THE "EROSION CONTROL PLAN" CONTAINED HEREIN. THE CONTRACTOR SHALL BE RESPONSIBLE TO POST ALL BONDS AS REQUIRED BY THE LOCAL MUNICIPALITIES, OR SOIL CONSERVATION SERVICE WHICH WOULD GUARANTEE THE PROPER IMPLEMENTATION OF THE PLAN.

12. ALL SITE WORK, MATERIALS OR CONSTRUCTION, AND CONSTRUCTION METHODS FOR EARTHWORK STORM DRAINAGE AND UTILITY WORK SHALL CONFORM TO THE SPECIFICATIONS AND DETAILS AND APPLICABLE SECTIONS OF THE STATE OF RHODE ISLAND DEPARTMENT OF TRANSPORTATION UNLESS OTHERWISE STATED IN THE PROJECT MANUAL SPECIFICATIONS. ALL FILL MATERIALS UNDER STRUCTURES AND PAVED AREAS SHALL BE PER THE SPECIFICATIONS, AND/OR PROJECT GEOTECHNICAL REPORT, AND SHALL BE PLACED IN ACCORDANCE WITH THE SPECIFICATIONS OF THE DOT, UNDER THE SUPERVISION OF A QUALIFIED PROFESSIONAL ENGINEER. MATERIAL SHALL BE COMPACTED IN 12" LIFTS TO 95% OF THE MAXIMUM DRY DENSITY AS DETERMINED BY ASTM D 1557 AT 3 +/- PERCENT OF OPTIMUM MOISTURE CONTENT.

13. ALL DISTURBANCE INCURRED TO TOWN OR STATE PROPERTY DUE TO CONSTRUCTION SHALL BE RESTORED TO ITS PREVIOUS CONDITION OR BETTER, TO THE SATISFACTION OF THE TOWN OF BURRILLVILLE AUTHORITY AND STATE OF RHODE ISLAND.

14. ALL CONSTRUCTION SHALL COMPLY WITH THE LOCAL MUNICIPALITY'S STANDARDS AND STATE OF RHODE ISLAND'S DOT SPECIFICATIONS. ALL CONSTRUCTION WITHIN A DOT RIGHT OF WAY SHALL COMPLY WITH ALL DEPARTMENT OF TRANSPORTATION STANDARDS. WHERE SPECIFICATIONS OR STANDARDS ARE IN CONFLICT, THE MORE STRINGENT SPECIFICATION OR STANDARD SHALL BE SUPERIOR.

PRODUCT NOTES:

1. SHOP DRAWINGS: THE CONTRACTOR SHALL SUBMIT SHOP DRAWINGS OF MATERIALS AND STRUCTURES FOR REVIEW AND APPROVAL PRIOR TO DELIVERY TO THE SITE. ALLOW 14 WORKING DAYS FOR REVIEW.

2. POLY VINYL CHLORIDE PIPE (PVCP) FOR STORM SEWER AND SANITARY PIPING SHALL HAVE BUILT-IN RUBBER GASKET JOINTS. PVCP SHALL CONFORM TO ASTM D-3034 (SDR35) WITH COMPRESSION JOINTS AND MOLDED FITTINGS. PVCP SHALL BE INSTALLED IN ACCORDANCE WITH THE DETAILS, ASTM-D2321 AND MANUFACTURERS RECOMMENDED PROCEDURE.

3. ALL RCP SHALL CONFORM TO THE REQUIREMENTS OF ASTM C-76; ALL RCP SHALL BE CLASS IV UNLESS OTHERWISE SHOWN. JOINTS SHALL CONFORM TO THE REQUIREMENTS OF ASTM C-443.

4. MANHOLE SECTIONS AND CONSTRUCTION SHALL CONFORM TO ASTM C-478.

5. HIGH DENSITY POLYETHYLENE (HDPE) STORM SEWER 12" OR GREATER IN DIAMETER SHALL BE HI-Q PIPE AS MANUFACTURED BY HANCOR INC. OR APPROVED EQUAL. HDPE PIPE SHALL HAVE SMOOTH INTERIOR AND CORRUGATED EXTERIOR AND SHALL MEET THE REQUIREMENTS OF AASHTO M294, TYPE S. PIPE SECTIONS SHALL BE JOINED WITH BELL-AND-SPIGOT JOINT MEETING THE REQUIREMENTS OF AASHTOS. M294. THE BELL SHALL BE AN INTEGRAL PART OF THE PIPE AND PROVIDE A MINIMUM PULL-APART STRENGTH OF 400 POUNDS. THE JOINT SHALL BE WATERTIGHT ACCORDING TO THE REQUIREMENTS OF ASTM D3212. GASKETS SHALL BE MADE OF POLYISOPRENE MEETING THE REQUIREMENTS OF ASTM F477. ALTERNATIVE HDPE PIPE MAY BE USED IF APPROVED BY THE ENGINEER AND CONSTRUCTION MANAGER PRIOR TO ORDERING.

6. HIGH DENSITY POLYETHYLENE (HDPE) STORM SEWER LESS THAN 12" IN DIAMETER SHALL BE HI-Q PIPE AS MANUFACTURED BY HANCOR INC. OR APPROVED EQUAL. HDPE PIPE SHALL HAVE SMOOTH INTERIOR AND CORRUGATED EXTERIOR AND SHALL MEET THE REQUIREMENTS OF AASHTO 252, TYPE S. PIPE SECTIONS SHALL BE JOINED WITH COUPLING BANDS OR EXTERNAL SNAP COUPLERS COVERING AT LEAST 2 FULL CORRUGATIONS ON EACH END OF THE PIPE. SILT-TIGHT (GASKET) CONNECTIONS SHALL INCORPORATE A CLOSED SYNTHETIC EXPANDED RUBBER GASKET. MEETING THE REQUIREMENTS OF AASHTO D1056 GRADE 2A2. GASKETS SHALL BE INSTALLED ON THE CONNECTION BY THE PIPE MANUFACTURER. ALTERNATIVE HDPE PIPE MAY BE USED IF APPROVED BY THE ENGINEER AND CONSTRUCTION MANAGER PRIOR TO ORDERING.

GENERAL NOTES

1. THE CONTRACTOR SHALL VERIFY ALL SITE CONDITIONS IN THE FIELD AND CONTACT THE SITE ENGINEER AND ARCHITECT IF THERE ARE ANY QUESTIONS OR CONFLICTS REGARDING THE CONSTRUCTION DOCUMENTS AND/OR FIELD CONDITIONS.

2. DO NOT INTERRUPT EXISTING UTILITIES SERVICING FACILITIES OCCUPIED AND USED BY THE OWNER OR OTHERS DURING OCCUPIED HOURS EXCEPT WHEN SUCH INTERRUPTIONS HAVE BEEN AUTHORIZED IN WRITING BY THE OWNER AND THE LOCAL MUNICIPALITIES. INTERRUPTIONS SHALL ONLY OCCUR AFTER ACCEPTABLE TEMPORARY SERVICE HAS BEEN PROVIDED.

3. THE CONTRACTOR SHALL ABIDE BY ALL OSHA FEDERAL STATE AND LOCAL REGULATIONS WHEN OPERATING CRANES, BOOMS, HOISTS, ETC. IN CLOSE PROXIMITY TO OVERHEAD ELECTRIC LINES. IF CONTRACTOR MUST OPERATE EQUIPMENT CLOSE TO ELECTRIC LINES, CONTACT POWER COMPANY TO MAKE ARRANGEMENTS FOR PROPER SAFEGUARDS. ANY UTILITY COMPANY FEES SHALL BE PAID FOR BY THE CONTRACTOR.

4. THE CONTRACTOR SHALL PROVIDE RECORD DRAWINGS OF ALL CONSTRUCTION (INCLUDING UNDERGROUND UTILITIES) TO THE OWNER AT THE END OF CONSTRUCTION.

5. THE ARCHITECT OR ENGINEER IS NOT RESPONSIBLE FOR SITE SAFETY MEASURES TO BE EMPLOYED DURING CONSTRUCTION. THE ARCHITECT AND ENGINEER HAVE NO CONTRACTUAL DUTY TO CONTROL THE SAFEST METHODS OR MEANS OF THE WORK, JOB SITE RESPONSIBILITIES, SUPERVISION OR TO SUPERVISE SAFETY AND DOES NOT VOLUNTARILY ASSUME ANY SUCH DUTY OR RESPONSIBILITY.

6. INFORMATION ON EXISTING UTILITIES AND STORM DRAINAGE SYSTEMS HAS BEEN COMPILED FROM AVAILABLE INFORMATION INCLUDING UTILITY COMPANY AND MUNICIPAL RECORD MAPS AND/OR FIELD SURVEY AND IS NOT GUARANTEED CORRECT OR COMPLETE. UTILITIES AND STORM DRAINAGE SYSTEMS ARE SHOWN TO ALERT THE CONTRACTOR TO THEIR PRESENCE AND THE CONTRACTOR IS SOLELY RESPONSIBLE FOR DETERMINING ACTUAL LOCATIONS AND ELEVATIONS OF ALL UTILITIES AND STORM DRAINAGE SYSTEMS INCLUDING SERVICES. PRIOR TO DEMOLITION OR CONSTRUCTION, THE CONTRACTOR SHALL CONTACT "CALL BEFORE YOU DIG" 72 HOURS BEFORE COMMENCEMENT OF WORK AT "811" AND VERIFY ALL UTILITY AND STORM DRAINAGE SYSTEM LOCATIONS.

7. DO NOT SCALE DRAWINGS. DIMENSIONS GOVERN OVER SCALED DIMENSIONS.

8. IF PLANS AND OR SPECIFICATIONS ARE IN CONFLICT, THE MOST EFFECTIVE SHALL APPLY AS DETERMINED BY A LICENSED PROFESSIONAL AND APPROVED BY TOWN STAFF.

9. ALL CONTRACTORS AND SUBCONTRACTORS SHALL OBTAIN COMPLETE DRAWING PLAN SETS FOR BIDDING AND CONSTRUCTION. PLAN SETS SHALL NOT BE DISASSEMBLED INTO PARTIAL PLAN SETS FOR USE BY CONTRACTORS AND SUBCONTRACTORS OF INDIVIDUAL TRADES. IT SHALL BE THE CONTRACTOR'S AND SUBCONTRACTOR'S RESPONSIBILITY TO OBTAIN COMPLETE PLAN SETS FOR USE IN BIDDING AND CONSTRUCTION.

10. ALL NOTES AND DIMENSIONS DESIGNATED "TYPICAL" APPLY TO ALL LIKE OR SIMILAR CONDITIONS THROUGHOUT THE PROJECT.

11. CONTRACTOR'S TO TAKE AND VERIFY ALL DIMENSIONS AND CONDITIONS OF THE WORK AND BE RESPONSIBLE FOR COORDINATION OF SAME. FIELD VERIFY ALL EXISTING CONDITIONS PRIOR TO START OF WORK.

12. THESE PLANS ARE FOR PERMITTING PURPOSES ONLY AND ARE NOT FOR CONSTRUCTION. NO CONSTRUCTION OR DEMOLITION SHALL BEGIN UNTIL APPROVAL OF THE FINAL PLANS IS GRANTED BY ALL GOVERNING AND REGULATORY AGENCIES.

UTILITIES NOTES

UTILITY CONSTRUCTION NOTES:

1. CONTRACTOR IS RESPONSIBLE FOR CONTACTING THE LOCAL MUNICIPALITIES TO SECURE PERMITS AND FOR PAYMENT OF FEES FOR STREET CUTS AND CONNECTIONS TO EXISTING UTILITIES.

2. THE CONTRACTOR SHALL PROVIDE AND MAINTAIN TRAFFIC DEVICES FOR PROTECTION OF VEHICLES AND PEDESTRIANS CONSISTING OF DRUMS, BARRIERS, SIGNS, LIGHTS FENCES AND UNIFORMED TRAFFIC CONTROLLERS AS REQUIRED, ORDERED BY THE ENGINEER OR REQUIRED BY THE LOCAL GOVERNING AUTHORITIES.

3. THIS PLAN DETAILS SITE INSTALLED PIPES UP TO 5' FROM THE BUILDING FACE. REFER TO DRAWINGS BY OTHERS FOR BUILDING CONNECTION POINT OR AT EXISTING UTILITY OR PIPE CONNECTION POINT.

4. THE CONTRACTOR SHALL VISIT THE SITE AND VERIFY THE ELEVATION AND LOCATION OF ALL UTILITIES BY VARIOUS MEANS PRIOR TO BEGINNING ANY EXCAVATION. TEST PITS SHALL BE DUG AT ALL LOCATIONS WHERE SEWERS CROSS UTILITIES, AND THE HORIZONTAL AND VERTICAL LOCATIONS OF THE UTILITIES SHALL BE DETERMINED. THE CONTRACTOR SHALL CONTACT THE SITE ENGINEER IN THE EVENT OF ANY DISCOVERED OR UNFORESEEN CONFLICTS BETWEEN EXISTING AND PROPOSED UTILITIES SO THAT AN APPROPRIATE MODIFICATION MAY BE MADE.

5. UTILITY CONNECTION DESIGN AS REFLECTED ON THE PLAN MAY CHANGE SUBJECT TO UTILITY CO. AND TOWN STAFF REVIEW.

6. THE CONTRACTOR SHALL ENSURE THAT ALL UTILITY COMPANIES AND TOWN STANDARDS FOR MATERIALS AND CONSTRUCTION METHODS ARE MET. THE CONTRACTOR SHALL PERFORM PROPER COORDINATION WITH THE RESPECTIVE UTILITY PROVIDER, TOWN OF BURRILLVILLE PUBLIC WORKS DEPARTMENT AND TOWN OF BURRILLVILLE WATER & SEWER DEPARTMENT.

7. THE CONTRACTOR SHALL ARRANGE FOR AND COORDINATE WITH THE RESPECTIVE UTILITY COMPANIES FOR SERVICE INSTALLATIONS AND CONNECTIONS. THE CONTRACTOR SHALL COORDINATE WORK TO BE PERFORMED BY THE VARIOUS UTILITY COMPANIES AND SHALL PAY ALL FEES FOR CONNECTIONS, DISCONNECTION, REALLOCATIONS, INSPECTIONS, AND DEMOLITION.

8. ALL EXISTING PAVEMENT WHERE UTILITY PIPING IS TO BE INSTALLED SHALL BE SAW CUT. AFTER UTILITY INSTALLATION IS COMPLETED THE SITE CONTRACTOR SHALL INSTALL TEMPORARY OR PERMANENT PAVEMENT REPAIR AS DETAILED ON THE PLANS OR AS REQUIRED BY THE AUTHORITY HAVING JURISDICTION.

9. ALL PIPES SHALL BE LAID ON STRAIGHT ALIGNMENTS AND EVEN GRADES USING A PIPE LASER OR OTHER ACCURATE METHOD.

10. SANITARY LATERAL SHALL MAINTAIN (10' MIN. HORIZONTAL 1.5' VERTICAL MIN.) SEPARATION DISTANCE FROM WATER LINES, OR ADDITIONAL PROTECTION MEASURES WILL BE REQUIRED WHERE PERMITTED.

11. RELOCATION OF UTILITY COMPANY FACILITIES SUCH AS POLES, TO BE DONE IN ACCORDANCE WITH THE REQUIREMENTS OF THE FACILITY OWNERS.

12. THE CONTRACTOR SHALL COMPACT THE PIPE BACKFILL IN 12" LIFTS ACCORDING TO THE PIPE BEDDING DETAILS. TRENCH BOTTOM SHALL BE STABLE IN HIGH GROUNDWATER AREAS. A PIPE FOUNDATION SHALL BE USED IN AREAS OF ROCK EXCAVATION. STORM SEWERS MAY BE PLACED PRIOR TO PLACING FILL.

13. CONTRACTOR TO PROVIDE SLEEVES UNDER FOOTINGS FOR UTILITY CONNECTIONS.

14. UTILITY PENETRATIONS AND LOCATIONS ARE SHOWN FOR THE CONTRACTOR'S INFORMATION AND SHALL BE VERIFIED WITH THE MEP DRAWINGS AND CONSTRUCTION MANAGER.

15. ALL UTILITY CONSTRUCTION IS SUBJECT TO INSPECTION FOR APPROVAL PRIOR TO BACKFILLING, IN ACCORDANCE WITH THE APPROPRIATE UTILITY COMPANY AND/OR THE LOCAL MUNICIPALITIES' REQUIREMENTS.

16. A ONE-FOOT MINIMUM CLEARANCE BETWEEN WATER, GAS, ELECTRICAL, AND TELEPHONE LINES AND STORM SEWERS SHALL BE PROVIDED. A SIX-INCH MINIMUM CLEARANCE SHALL BE MAINTAINED BETWEEN STORM AND SANITARY SEWER WITH A CONCRETE ENCASEMENT.

17. CONTRACTOR SHALL PROVIDE ALL BENDS, FITTINGS, ADAPTERS, ETC., AS REQUIRED FOR PIPE CONNECTIONS TO BUILDING STUB OUTS, INCLUDING ROOF/FOOTING DRAIN CONNECTIONS TO ROOF LEADERS AND TO STORM DRAINAGE SYSTEM.

18. MANHOLE RIMS SHALL BE SET TO ELEVATIONS SHOWN. SET ALL EXISTING MANHOLE FRAMES AND VALVE COVERS TO BE RAISED OR LOWERED FLUSH WITH FINAL GRADE AS NECESSARY.

19. SITE CONTRACTOR SHALL COORDINATE INSTALLATION OF CONDUIT AND CABLES FOR SITE LIGHTING WITH THE BUILDING ELECTRICIAN/ELECTRICAL CONTRACTOR.

20. CONTRACTOR SHALL COORDINATE INSTALLATION FOR ELECTRICAL SERVICES TO PYLON SIGNS AND SITE LIGHTING WITH THE BUILDING ELECTRICIAL/ELECTRICAL CONTRACTOR.

21. THE CONTRACTOR SHALL RESTORE ANY UTILITY STRUCTURE, PIPE, UTILITY, PAVEMENT, CURBS, SIDEWALKS, OR LANDSCAPED AREAS DISTURBED DURING CONSTRUCTION, TO THEIR ORIGINAL CONDITION OR BETTER.

22. INFORMATION ON EXISTING UTILITIES HAS BEEN COMPILED FROM AVAILABLE INFORMATION INCLUDING UTILITY COMPANY AND MUNICIPAL RECORD MAPS AND/OR FIELD SURVEY AND IS NOT GUARANTEED CORRECT OR COMPLETE. UTILITIES ARE SHOWN TO ALERT THE CONTRACTOR TO THEIR PRESENCE. THE CONTRACTOR IS SOLELY RESPONSIBLE FOR DETERMINING ACTUAL LOCATIONS AND ELEVATIONS OF ALL UTILITIES INCLUDING SERVICES. CONTACT "CALL BEFORE YOU DIG" AT 811 72 HOURS PRIOR TO CONSTRUCTION AND VERIFY ALL UNDERGROUND AN OVERHEAD UTILITY LOCATIONS.

23. THE CONTRACTOR SHALL ARRANGE AND COORDINATE WITH UTILITY COMPANIES AND THE TOWN OF BURRILLVILLE FOR WORK TO BE PERFORMED BY UTILITY COMPANIES OR BY THE TOWN OF BURRILLVILLE. THE CONTRACTOR SHALL PAY ALL UTILITY FEES AND REPAIR PAVEMENTS AS NECESSARY.

24. ELECTRIC, AND TELEPHONE SERVICES SHALL BE INSTALLED UNDERGROUND FROM SERVICE POLE CL&P #1543. THE CONTRACTOR SHALL INSTALL AND BACKFILL TWO 4" PVC CONDUITS FOR TELEPHONE SERVICE, FOUR 4" PVC CONDUITS FOR ELECTRIC SERVICE PRIMARY, PVC CONDUITS FOR ELECTRICAL SECONDARY PER BUILDING ELECTRICAL PLANS (SCHEDULE 80N UNDER PAVEMENT, SCHEDULE 40 IN NON PAVEMENT AREAS). SERVICES MAY BE INSTALLED IN A COMMON TRENCH WITH 1" CLEAR SPACE BETWEEN. MINIMUM COVER IS 36" ON ELECTRIC CONDUITS, AND 24" ON TELEPHONE CONDUITS. SERVICES SHALL BE MARKED WITH MAGNETIC LOCATOR TAPE AND SHALL BE BEDDED, INSTALLED, AND BACKFILLED IN ACCORDANCE WITH ELECTRIC COMPANY, AND PHONE COMPANY STANDARDS. GALVANIZED STEEL ELECTRICAL CONDUIT SHALL BE USED AT POLE AND TRANSFORMER LOCATIONS. INSTALL HANDHOLES AS REQUIRED. INSTALL CONCRETE ENCASEMENT ON PRIMARY ELECTRIC CONDUITS IF REQUIRED BY ELECTRIC COMPANY.

25. ALL WATER LINES TO HAVE A MINIMUM COVER OF 54-INCHES. ALL LINES SHALL BE BEDDED IN 6" SAND AND BACKFILLED WITH 12" SAND.

26. ALL WATER MAINS, WATER SERVICES AND SANITARY SEWER LATERAL SHALL CONFORM TO THE DEPARTMENT OF ENVIRONMENTAL HEALTH, APPLICABLE TOWN OF BURRILLVILLE WATER & SEWER DEPARTMENT SPECIFICATIONS, AS WELL AS TO OTHER APPLICABLE CODES AND SPECIFICATIONS FOR POTABLE WATER SYSTEMS.

27. ALTERNATIVE METHODS AND PRODUCTS OTHER THAN THOSE SPECIFIED MAY BE USED IF REVIEWED AND APPROVED BY THE OWNER, ENGINEER, UTILITY PROVIDER AND APPROPRIATE REGULATORY AGENCIES PRIOR TO INSTALLATION.

28. THE CONTRACTOR SHALL MAINTAIN ALL UTILITY CONNECTIONS TO EXISTING ABUTTING HOUSES & COMMERCIAL BUILDINGS WITHOUT INTERRUPTION UNLESS/UNTIL AUTHORIZED TO DISCONNECT BY THE OWNERS, THE PROJECT ENGINEER, UTILITY PROVIDER AND GOVERNING AUTHORITIES.

29. ANY EXISTING POTABLE WATER WELLS AND SEPTIC TANKS/ABSORPTION AREAS SHALL BE ABANDONED AND REMOVED PER THE DEPARTMENT OR ENVIRONMENTAL PROTECTION AND HEALTH CODE REQUIREMENTS.

30

EROSION CONTROL NOTES

SEDIMENT & EROSION CONTROL NARRATIVE
THE SEDIMENT AND EROSION CONTROL PLAN WAS DEVELOPED TO PROTECT THE EXISTING ROADWAY AND STORM DRAINAGE SYSTEMS, ADJACENT PROPERTIES, AND THE WETLAND AREA FROM SURFACE RUNOFF AND EROSION. A CONSTRUCTION SEQUENCE IS PROVIDED TO PROVIDE SURFACE RUNOFF CONTROLS PRIOR TO THE PROJECT CONSTRUCTION BEGINNING.

CONSTRUCTION SCHEDULE
THE ANTICIPATED STARTING DATE FOR CONSTRUCTION IS SPRING 2024 WITH COMPLETION ANTICIPATED SUMMER 2024. APPROPRIATE EROSION CONTROL MEASURES AS DESCRIBED HEREIN, SHALL BE INSTALLED BY THE CONTRACTOR PRIOR TO THE COMMENCEMENT OF ALL CONSTRUCTION ACTIVITY.

CONTINGENCY EROSION PLAN
THE CONTRACTOR SHALL INSTALL ALL SPECIFIED EROSION CONTROL MEASURES AND WILL BE REQUIRED TO MAINTAIN THEM IN THEIR INTENDED FUNCTIONING CONDITION. THE AGENTS OF THE DIRECTOR OF PLANNING & DEVELOPMENT, INLAND WETLANDS AGENCY AND/OR SITE ENGINEER SHALL HAVE THE AUTHORITY TO REQUIRE SUPPLEMENTAL MAINTENANCE OR ADDITIONAL MEASURES IF FIELD CONDITIONS ARE ENCOUNTERED BEYOND WHAT WOULD NORMALLY BE ANTICIPATED.

CONSTRUCTION SEQUENCE
THE FOLLOWING CONSTRUCTION SEQUENCE IS RECOMMENDED:

1. CONTACT TOWN OF BURRILLVILLE AGENT AT LEAST FORTY-EIGHT (48) HOURS PRIOR TO COMMENCEMENT OF ANY DEMOLITION, CONSTRUCTION OR REGULATED ACTIVITY ON the PROJECT.
   A PRE-CONSTRUCTION MEETING WITH LOCAL AND/OR STATE OFFICIALS NEEDS TO BE HELD PRIOR TO THE START OF CONSTRUCTION
2. CLEARING LIMITS SHALL BE PHYSICALLY MARKED IN THE FIELD AND APPROVED BY THE TOWN OF BURRILLVILLE AGENT PRIOR TO THE START OF WORK ON THE SITE. INSTALL TREE PROTECTION AND PERIMETER SILT FENCE & HAY BALE SEDIMENT BARRIERS.
3. CONSTRUCT TRACKING PADS AT ENTRANCES AND WRAP FILTER FABRIC AROUND GRATE OF CATCH BASINS OR INSTALL SILT SACKS ON CATCH BASIN INLETS ON OFF SITE ROADS. INSTALL SILT FENCE AT PERIMETER OF PROPOSED SITE DISTURBANCE AND INSTALL ALL EROSION CONTROL MEASURES AND TREE PROTECTION INDICATED ON THESE PLANS. INSTALL SEDIMENT TRAPS AND INSTALL SEDIMENT BASINS IN REQUIRED AT LOW AREAS OF SITE OR AS ORDERED BY THE ENGINEER OR AS SHOWN ON THESE PLANS.
4. CLEAR AND GRUB SITE. STOCK PILE CHIPS. STRIP AND STOCKPILE TOPSOIL.
5. INSTALL ADDITIONAL SILT FENCE AS REQUIRED, CONSTRUCT TEMPORARY DIVERSION BERMS AND AND SEDIMENT TRAPS.
6. CONTINUE EARTHWORK. CONSTRUCT FILL SLOPE. INSTALL ADDITIONAL EROSION CONTROL AS REQUIRED. TOPSOIL AND SEED SLOPES WHICH HAVE ACHIEVED FINAL SITE GRADING.
7. CONSTRUCTION STAKING OF ALL BUILDING CORNERS, UTILITIES, ACCESS DRIVES, AND PARKING AREAS.
8. ROUGH GRADING.
9. CONSTRUCT STORM WATER QUALITY BASIN AND FINAL OUTLET.
10. INSTALLATION OF STORM DRAINAGE.
11. FOUNDATION CONSTRUCTION. BEGIN SUPERSTRUCTURE.
12. REMOVE SEDIMENT FROM BEHIND SILT FENCES, AND FROM SEDIMENTATION BASINS AS REQUIRED. REMOVAL SHALL BE ON A PERIODIC BASIS (EVERY SIGNIFICANT RAINFALL). INSPECTION OF EROSION CONTROL MEASURES SHALL BE ON A WEEKLY BASIS. SEDIMENT COLLECTED SHALL BE DEPOSITED AND SPREAD EVENLY UPLAND ON SLOPES DURING CONSTRUCTION.
13. INSTALL SEPTIC, WELL AND ALL OTHER UTILITIES. COMPLETE STORM SEWERS.
14. INSTALL SITE LIGHTING, LOADING AREA AND TRASH ENCLOSURE.
15. FINISH GRADING AND CONSTRUCT PARKING AREA SUBGRADE.
16. CONSTRUCT SIDEWALKS.
17. PAVING OF PARKING AREAS AND DRIVEWAYS
18. FINAL GRADING OF SLOPE AREAS.
19. PLACE 4" TOPSOIL ON SLOPES AFTER FINAL GRADING IS COMPLETED. FERTILIZE SEED AND MULCH. SEED MIXTURE TO BE INSTALLED APRIL 11 TO JUNE 1 OR AUGUST 15 TO OCTOBER 1 USE EROSION CONTROL BLANKETS AS REQUIRED OR ORDERED FOR SLOPES GREATER THAN 3:1. FOR TEMPORARY STABILIZATION BEYOND SEEDING DATES USE ANNUAL RYE AT 4.0 LBS/1,000 S.F. FERTILIZE WITH 10-10-10 AT 1.0 LBS. OF NITROGEN PER 1,000 S.F. AND LIME AT 100 LBS/1,000 S.F. (MAX.).
20. LANDSCAPE ISLANDS AND PERIMETER AREAS. INSTALL SIGNING AND PAVEMENT MARKINGS.
21. UPON DIRECTION OF THE TOWN OF BURRILLVILLE AGENT, EROSION AND SEDIMENT CONTROL MEASURES SHALL BE REMOVED FOLLOWING STABILIZATION OF THE SITE.

SEQUENCE OF OPERATIONS
OPERATION I – CLEARING AND GRUBBING

1. ALL SEDIMENTATION AND EROSION CONTROL MEASURES, INCLUDING THE CONSTRUCTION OF THE TEMPORARY SEDIMENT TRAPS AND ANTI-TRACKING PADS, WILL BE INSTALLED PRIOR TO THE START OF CLEARING AND GRUBBING AND DEMOLITION OPERATIONS.
2. FOLLOWING INSTALLATION OF ALL SEDIMENTATION AND EROSION CONTROL MEASURES, THE CONTRACTOR SHALL NOT PROCEED WITH OPERATION II UNTIL THE ENGINEER HAS INSPECTED AND APPROVED ALL INSTALLATIONS.
3. THE CONTRACTOR SHALL TAKE EXTREME CARE DURING OPERATION I, SO AS NOT TO DISTURB UNPROTECTED WETLAND AREAS OR SEDIMENTATION AND EROSION CONTROL STRUCTURES.

OPERATION II – ROUGH GRADING

1. DURING THE REMOVAL AND/OR PLACEMENT OF EARTH AS INDICATED ON THE SITE PLAN, TOPSOIL SHALL BE STRIPPED AND APPROPRIATELY STOCKPILED FOR REUSE.
2. ALL STOCKPILED TOPSOIL SHALL BE SEEDED, MULCHED WITH HAY, AND ENCLOSED BY A SILTATION FENCE.

OPERATION III – FILLING

1. PRIOR TO FILLING, ALL SEDIMENTATION AND EROSION CONTROL STRUCTURES SHALL BE PROPERLY IMPLEMENTED, MAINTAINED AND FULLY INSTALLED, AS DIRECTED BY THE ENGINEER AND AS SHOWN ON the PLAN.
2. ALL FILL MATERIAL ADJACENT TO ANY WETLAND AREAS SHALL BE GOOD QUALITY, WITH LESS THAN 5% FINES PASSING THROUGH A #200 SIEVE (BANK RUN), SHALL BE PLACED IN MAXIMUM ONE FOOT LIFTS, AND SHALL BE COMPACTED TO 95% MAX. DRY DENSITY MODIFIED PROCTOR OR AS SPECIFIED IN CONTRACT SPECIFICATIONS.
3. AS GENERAL GRADING OPERATIONS PROGRESS, THE TEMPORARY DIVERSION DITCHES SHALL BE RAISED OR LOWERED, AS NECESSARY, TO DIVERT SURFACE RUNOFF TO THE BASINS.

OPERATION IV – PLACEMENT OF DRAINAGE STRUCTURES, UTILITIES, AND BUILDING CONSTRUCTION.

1. STAKED SILT FENCES SHALL BE INSTALLED AT THE DOWNHILL SIDES OF BUILDING EXCAVATIONS, DEWATERING PUMP DISCHARGES, AND UTILITY TRENCH MATERIAL STOCKPILES.

OPERATION V – FINAL GRADING AND PAVING

1. ALL INLET AND OUTLET PROTECTION SHALL BE PLACED AND MAINTAINED AS DISCUSSED IN OPERATION IV.
2. NO CUT OR FILL SLOPES SHALL EXCEED 2:1 EXCEPT WHERE STABILIZED BY ROCK FACED EMBANKMENTS OR EROSION CONTROL BLANKETS, JUTE MESH AND VEGETATION. ALL SLOPES SHALL BE SEEDED, AND THE ROAD SHOULDER AND BANKS WILL BE STABILIZED IMMEDIATELY UPON COMPLETION OF FINAL GRADING UNTIL TURF IS ESTABLISHED.
3. PAVEMENT BASE COURSES SHALL BE INSTALLED OVER AREAS TO BE PAVED AS SOON AS FINAL SUB-GRADES ARE ESTABLISHED AND UNDERGROUND UTILITIES HAVE BEEN INSTALLED.
4. CONSTRUCT PAVEMENT, PLACE TOPSOIL, FINAL SEED, MULCH AND LANDSCAPING.
5. REMOVE ALL TEMPORARY EROSION CONTROL DEVICES ONLY AFTER ALL AREAS HAVE BEEN PAVED AND/OR GRASS HAS BEEN WELL ESTABLISHED AND THE SITE HAS BEEN INSPECTED AND APPROVED BY THE TOWN OR GOVERNING WETLAND AGENCY.

SEQUENCE FOR INSTALLATION OF SOIL EROSION & SEDIMENTATION CONTROL MEASURES
PHASE 1

1. ERECT SILTATION FENCES, SEDIMENT TRAPS, DIVERSION DITCHES, AND ANTI-TRACKING PAD.
2. STRIP TOPSOIL AND STOCKPILE.
3. PERFORM CLEARING AND GRUBBING ACTIVITIES, AND DEMOLITION.
4. STABILIZE STOCK PILE.

PHASE 2

1. INSPECT AND MAINTAIN SEDIMENTATION AND EROSION CONTROL STRUCTURES.
2. ROUGH GRADING.

PHASE 3

1. INSPECT AND MAINTAIN SEDIMENTATION AND EROSION CONTROL STRUCTURES.
2. PERFORM FILLING ACTIVITIES.

PHASE 4

1. INSPECT AND MAINTAIN SEDIMENTATION AND EROSION CONTROL STRUCTURES.
2. CONSTRUCT DRAINAGE STRUCTURES. CONSTRUCT DIVERSION BERMS, RIP RAPPED LINED DITCHES AND SEDIMENTATION BASINS.

PHASE 5

1. INSPECT AND MAINTAIN SEDIMENTATION AND EROSION CONTROL STRUCTURES.
2. PERFORM FINAL GRADING AND PAVING.

PHASE 6

1. INSPECT AND MAINTAIN SEDIMENTATION AND EROSION CONTROL STRUCTURES.
2. RESPREAD TOPSOIL.
3. LIME, FERTILIZE, AND SEED.
4. MULCH.
5. FINAL COVER.

PHASE 7

1. MAINTAIN SILTATION FENCES UNTIL COVER IS COMPLETELY STABILIZED.
2. PERFORM FINAL INSPECTION.
3. REMOVE SILTATION FENCES, CLEAN, AND RESTORE ALL AREAS.

INSTALLATION OF SEDIMENTATION AND EROSION CONTROL MEASURES
I. SILTATION FENCE

A. DIG A SIX INCH TRENCH ON THE UPHILL SIDE OF THE DESIGNATED FENCE LINE LOCATION.
B. POSITION THE POST AT THE BACK OF THE TRENCH (DOWNHILL SIDE), AND HAMMER THE POST AT LEAST 1.5 FEET INTO THE GROUND.
C. LAY THE BOTTOM SIX INCHES OF THE FABRIC IN THE TRENCH TO PREVENT UNDERMINING BY STORM WATER RUN-OFF.
D. BACKFILL THE TRENCH AND COMPACT.

OPERATION AND MAINTENANCE OF SEDIMENTATION AND EROSION CONTROL MEASURES
I. SILTATION FENCE

A. ALL SILTATION FENCES SHALL BE INSPECTED AS A MINIMUM WEEKLY OR AFTER EACH RAINFALL. ALL DETERIORATED FABRIC AND DAMAGED POSTS SHALL BE REPLACED AND PROPERLY REPOSITIONED IN ACCORDANCE WITH the PLAN.
B. SEDIMENT DEPOSITS SHALL BE REMOVED FROM BEHIND THE FENCE WHEN THEY EXCEED A HEIGHT OF ONE FOOT.

II. SEDIMENT TRAPS/BASINS

A. CONTRACTOR TO KEEP WEEKLY CHECKLIST LOGS FOR INSPECTIONS OF ALL SEDIMENT AND EROSION CONTROL DEVICES AND HAVE THEM READILY AVAILABLE ON-SITE AT ALL TIMES FOR INSPECTION BY DEEP, LOCAL AUTHORITIES OR ENGINEER.
B. ALL PONDS SHALL BE INSPECTED FOLLOWING EACH RAINFALL. REPAIR OF SLOPES SHALL BE PROMPTLY MADE AS NEEDED.
C. SEDIMENT DEPOSITS SHALL BE REMOVED FROM PONDS WHEN THEY EXCEED A HEIGHT OF ONE FOOT.
D. SEDIMENT SHALL BE DISPOSED OF ON-SITE OR AS DIRECTED BY THE ENGINEER AND LOCAL GOVERNING OFFICIALS.

EROSION AND SEDIMENT CONTROL PLAN

1. SILTATION FENCE WILL BE INSTALLED AT ALL CULVERT OUTLETS AND ALONG THE TOE OF ALL CRITICAL CUT AND FILL SLOPES.
2. CATCH BASINS WILL BE PROTECTED WITH SILT SACKS OR HAY BALES THROUGHOUT THE CONSTRUCTION PERIOD AND UNTIL ALL DISTURBED AREAS ARE THOROUGHLY STABILIZED.
3. ALL EROSION AND SEDIMENT CONTROL MEASURES WILL BE INSTALLED IN ACCORDANCE WITH THE STANDARDS AND SPECIFICATIONS OF THE EROSION AND SEDIMENT CONTROL HANDBOOK, LATEST EDITION.
4. EROSION AND SEDIMENT CONTROL MEASURES WILL BE INSTALLED PRIOR TO CONSTRUCTION WHENEVER POSSIBLE.
5. ALL CONTROL MEASURES WILL BE MAINTAINED IN EFFECTIVE CONDITION THROUGHOUT THE CONSTRUCTION PERIOD.
6. ADDITIONAL CONTROL MEASURES WILL BE INSTALLED DURING THE CONSTRUCTION PERIOD, IF NECESSARY OR REQUIRED.
7. SEDIMENT REMOVED FROM CONTROL STRUCTURES WILL BE DISPOSED IN A MANNER WHICH IS CONSISTENT WITH THE INTENT OF THE PLAN.
8. REBEL-UNION PARTNERS, LLC IS THE PERMITEE RESPONSIBLE FOR IMPLEMENTING the EROSION AND SEDIMENT CONTROL PLAN. the RESPONSIBILITY INCLUDES THE INSTALLATION AND MAINTENANCE OF CONTROL MEASURES, INFORMING ALL PARTIES ENGAGED ON THE CONSTRUCTION SITE OF THE REQUIREMENTS AND OBJECTIVES OF THE PLAN, NOTIFICATION OF THE BURRILLVILLE WETLANDS ENFORCEMENT OFFICER OR GOVERNING AUTHORITY OF THE TRANSFER OF the RESPONSIBILITY AND FOR CONVEYING A COPY OF THE EROSION AND SEDIMENT CONTROL PLAN IF THE TITLE TO THE LAND IS TRANSFERRED.

EROSION AND SEDIMENT CONTROL PLAN SEDIMENT AND EROSION CONTROL NOTES

1. THE DRAWING IS ONLY INTENDED TO DESCRIBE THE SEDIMENT AND EROSION CONTROL TREATMENT FOR the SITE. SEE SEDIMENT AND EROSION CONTROL DETAILS AND CONSTRUCTION SEQUENCE. REFER TO SITE PLAN FOR GENERAL INFORMATION AND OTHER PLANS FOR APPROPRIATE INFORMATION.
2. REBEL-UNION PARTNERS, LLC IS THE PERMITEE RESPONSIBLE FOR IMPLEMENTING the SEDIMENT AND EROSION CONTROL PLAN. the RESPONSIBILITY INCLUDES THE PROPER INSTALLATION AND MAINTENANCE OF CONTROL MEASURES, INFORMING ALL PARTIES ENGAGED WITH CONSTRUCTION ON THE SITE OF THE REQUIREMENTS AND OBJECTIVES OF the PLAN, INFORMING THE GOVERNING AUTHORITY OR INLAND WETLANDS AGENCY OF ANY TRANSFER OF the RESPONSIBILITY, AND FOR CONVEYING A COPY OF THE SEDIMENT & EROSION CONTROL PLAN IF THE TITLE TO THE LAND IS TRANSFERRED.
3. THE CONTRACTOR SHALL CONSTRUCT ALL SEDIMENT AND EROSION CONTROLS IN ACCORDANCE WITH THE RHODE ISLAND GUIDELINES FOR SOIL EROSION AND SEDIMENT CONTROL, LATEST EDITION IN ACCORDANCE WITH THE CONTRACT DOCUMENTS, AND AS DIRECTED BY THE TOWN OF BURRILLVILLE. THE CONTRACTOR SHALL KEEP A COPY OF THE GUIDELINES ON-SITE FOR REFERENCE DURING CONSTRUCTION.
4. ADDITIONAL AND/OR ALTERNATIVE SEDIMENT AND EROSION CONTROL MEASURES MAY BE INSTALLED DURING THE CONSTRUCTION PERIOD IF FOUND NECESSARY BY THE CONTRACTOR, OWNER, SITE ENGINEER, TOWN OFFICIALS, OR ANY GOVERNING AGENCY. THE CONTRACTOR SHALL CONTACT THE OWNER AND APPROPRIATE GOVERNING AGENCIES FOR APPROVAL IF ALTERNATIVE CONTROLS OTHER THAN THOSE SHOWN ON THE PLANS ARE PROPOSED.

Routine Inspections
The permittee shall routinely inspect the site for compliance with the general permit and the Plan for the site until a Notice of Termination has been submitted. Inspection procedures for these routine inspections shall be addressed and implemented in the following manner:

(i) The permittee shall maintain a rain gauge on-site to document rainfall amounts. At least once a week and within 24 hours of the end of a storm that generates a discharge, a qualified inspector (provided by the permittee), as defined in the "Definitions" section (Section 2) of the general permit, shall inspect, at a minimum, the following: disturbed areas of the construction activity that have not been finally stabilized; all erosion and sedimentation control measures; all structural control measures; soil stockpile areas; washout areas and locations where vehicles enter or exit the site. These areas shall be inspected for evidence of, or the potential for, pollutants entering the drainage system and impacts to the receiving waters. Locations where vehicles enter or exit the site shall also be inspected for evidence of off-site sediment tracking. For storms that end on a weekend, holiday or other time after which normal working hours will not commence within 24 hours, an inspection is required within 24 hours only for storms that equal or exceed 0.5 inches. For storms of less than 0.5 inches, an inspection shall occur immediately upon the start of the subsequent normal working hours. Where sites have been temporarily or finally stabilized, such inspection shall be conducted at least once every month for three months.

(ii) The qualified inspector(s) shall evaluate the effectiveness of erosion and sediment controls, structural controls, stabilization practices, and any other controls implemented to prevent pollution and determine if it is necessary to install, maintain, or repair such controls and/or practices to improve the quality of stormwater discharge(s).

(iii) A report shall be prepared and retained as part of the Plan. the report shall summarize: the scope of the inspection; name(s) and qualifications of personnel making the inspection; the date(s) of the inspection; weather conditions including precipitation information; major observations relating to erosion and sediment controls and the implementation of the Plan; a description of the stormwater discharge(s) from the site; and any water quality monitoring performed during the inspection. The report shall be signed by the permittee or his/her authorized representative in accordance with the "Certification of Documents" section (subsection 5(i)) of the general permit. The report shall include a statement that, in the judgment of the qualified inspector(s) conducting the site inspection, the site is either in compliance or out of compliance with the terms and conditions of the Plan and permit. If the site inspection indicates that the site is out of compliance, the inspection report shall include a summary of the remedial actions required to bring the site back into compliance. Non-engineered corrective actions (as identified in the Guidelines) shall be implemented on site within 24 hours and incorporated into a revised Plan within three (3) calendar days of the date of inspection unless another schedule is specified in the Guidelines. Engineered corrective actions (as identified in the Guidelines) shall be implemented on site within seven (7) days and incorporated into a revised Plan within ten (10) days of the date of inspection, unless another schedule is specified in the Guidelines or is approved by the commissioner. During the period in which any corrective actions are being developed and have not yet been fully implemented, interim measures shall be implemented to minimize the potential for the discharge of pollutants from the site.

(iv) Inspectors from the DEEP and the appropriate District may inspect the site for compliance with the general permit at any time construction activities are ongoing and upon completion of construction activities to verify the final stabilization of the site and/or the installation of post-construction stormwater management measures pursuant to Section 6(a).

(v) Additional inspections, reports and documentation may also be required to comply with the "Monitoring Requirements" section (Section 5(c))

6. THE CONTRACTOR SHALL KEEP A SUPPLY OF EROSION CONTROL MATERIAL (SILT FENCE, JUTE MESH, ETC.) ON-SITE FOR MAINTENANCE AND EMERGENCY REPAIRS.
7. PROTECT EXISTING TREES THAT ARE TO BE SAVED BY FENCING AT THE DRIP LINE OR AS SHOWN WITH SNOW FENCE, ORANGE SAFETY FENCE, OR EQUIVALENT FENCING. ANY LIMB TRIMMING SHOULD BE DONE BEFORE CONSTRUCTION BEGINS IN THAT AREA; FENCING SHALL BE MAINTAINED AND REPAIRED DURING CONSTRUCTION.
8. INSTALL PERIMETER SEDIMENT CONTROLS PRIOR TO CLEARING OR CONSTRUCTION. ALL CONSTRUCTION SHALL BE CONTAINED WITHIN THE LIMIT OF DISTURBANCE, WHICH SHALL BE MARKED WITH SILT FENCE, SAFETY FENCE, RIBBONS, OR OTHER MEANS PRIOR TO CLEARING. CONSTRUCTION ACTIVITY SHALL REMAIN ON THE UPHILL SIDE OF THE SILT FENCE UNLESS WORK IS SPECIFICALLY CALLED FOR ON THE DOWNHILL SIDE OF THE FENCE.
9. ANTI-TRACKING PADS SHALL BE INSTALLED AT START OF CONSTRUCTION AND MAINTAINED THROUGHOUT THE DURATION OF CONSTRUCTION. THE LOCATION OF THE TRACKING PADS MAY CHANGE AS VARIOUS PHASES OF CONSTRUCTION ARE COMPLETED.
10. TOPSOIL SHALL BE STRIPPED AND STOCKPILED FOR USE IN FINAL LANDSCAPING. ALL EARTH STOCKPILES SHALL HAVE SILT FENCE AROUND THE LIMIT OF PILE. PILES SHALL BE TEMPORARILY SEEDED IF PILE IS TO REMAIN IN PLACE FOR MORE THAN 2 MONTHS.
11. SEDIMENTATION BASINS SHALL PROVIDE 134 CUBIC YARDS OF SEDIMENT STORAGE PER DISTURBED ACRE CONTRIBUTING TO THE BASIN. PROVIDE BASIN VOLUMES FOR ALL DISTURBANCE ON SITE.
12. COMPLY WITH REQUIREMENTS OF CGS SECTION 22A, 430B FOR STORMWATER DISCHARGE FROM CONSTRUCTION ACTIVITIES AND WITH DEEP RECORD KEEPING AND INSPECTION REQUIREMENTS.
13. MINIMIZE LAND DISTURBANCES. SEED AND MULCH DISTURBED AREAS WITH TEMPORARY MIX AS SOON AS PRACTICABLE (2 WEEK MAXIMUM UNSTABILIZED PERIOD) USING PERENNIAL RYEGRASS AT 40 LBS PER ACRE. MULCH ALL CUT AND FILL SLOPES AND SWALES WITH LOOSE HAY AT A RATE OF 2 TONS PER ACRE. IF NECESSARY, REPLACE LOOSE HAY ON SLOPES WITH EROSION CONTROL BLANKETS OR JUTE CLOTH. MODERATELY GRADED AREAS, ISLANDS, AND TEMPORARY CONSTRUCTION STAGING AREAS MAY BE HYDROSEEDED WITH TACKIFIER.
14. SILT FENCE AND OTHER SEDIMENT CONTROL MEASURES SHALL BE INSTALLED IN ACCORDANCE WITH DRAWINGS AND MANUFACTURER'S RECOMMENDATIONS PRIOR TO WORK IN ANY UPLAND AREAS.
15. EXCAVATED MATERIAL FROM TEMPORARY SEDIMENT TRAPS MUST BE STOCKPILED ON UPHILL SIDE OF SILT FENCE.
16. INSTALL SILT FENCE ACCORDING TO MANUFACTURER'S INSTRUCTION, PARTICULARLY, BURY LOWER EDGE OF FABRIC INTO GROUND. SILT FENCE SHALL BE MIRAFI ENVIROFENCE, AMOCO SILT STOP OR EQUIVALENT APPROVED BY SITE ENGINEER. FILTER FABRIC USED SHALL BE MIRAFI 100X OR EQUIVALENT.
17. INSTALL TEMPORARY DIVERSION DITCHES, PLUNGE POOLS, SEDIMENT BASINS, SEDIMENT TRAPS AND DEWATERING PITS AS SHOWN AND AS NECESSARY DURING VARIOUS PHASES OF CONSTRUCTION TO CONTROL RUNOFF UNTIL UPHILL AREAS ARE STABILIZED. LOCATION OF TEMPORARY SEDIMENT BASINS WILL REQUIRE REVIEW AND APPROVAL BY THE ENGINEER AND GOVERNING OFFICIAL.
18. DIRECT ALL DEWATERING PUMP DISCHARGE TO A SEDIMENT CONTROL DEVICE SUCH AS TEMPORARY PITS, SEDIMENT BASINS OR GRASS FILTERS WITHIN THE APPROVED LIMIT OF DISTURBANCE. DISCHARGE TO STORM SEWERS OR SURFACE WATERS FROM SEDIMENT CONTROLS SHALL BE CLEAR.
19. BLOCK THE OPEN UPSTREAM ENDS OF DETENTION PIPE SYSTEM OUTLET CONTROL ORIFICE UNTIL SITE IS STABILIZED AND BLOCK END OF STORM SEWERS IN EXPOSED TRENCHES WITH BOARDS AND SANDBAGS AT THE END OF EACH WORKING DAY WHEN RAIN IS EXPECTED.
20. SWEEP AFFECTED PORTIONS OF OFF SITE ROADS ONE OR MORE TIMES A DAY (OR LESS FREQUENTLY IF TRACKING IS NOT A PROBLEM) DURING CONSTRUCTION. OTHER DUST CONTROL MEASURES TO BE USED AS NECESSARY INCLUDES WATERING DOWN DISTURBED AREAS, USING CALCIUM CHLORIDE, AND COVERING LOADS ON DUMP TRUCKS.
21. PERIODICALLY CHECK ACCUMULATED SEDIMENT LEVELS IN THE SEDIMENT TRAPS DURING CONSTRUCTION AND CLEAN ACCUMULATED SILT WHEN NECESSARY OR WHEN ONE FOOT OF SEDIMENT HAS ACCUMULATED. CLEAN ACCUMULATED SEDIMENT FROM CATCH BASIN SUMPS AS NECESSARY. REMOVE ACCUMULATED SEDIMENT FROM BEHIND SILT FENCE WHEN LEVEL REACHES HALF THE HEIGHT OF THE FENCE. DISPOSE OF SEDIMENT LEGALLY EITHER ON SITE IN NON-WETLANDS AREAS..
22. MAINTAIN ALL PERMANENT AND TEMPORARY SEDIMENT CONTROL DEVICES IN EFFECTIVE CONDITION THROUGHOUT THE CONSTRUCTION PERIOD. UPON COMPLETION OF WORK SWEEP PARKING LOT AND REMOVE ALL TEMPORARY SEDIMENT CONTROLS WHEN AUTHORIZED BY LOCAL GOVERNING AUTHORITY.
23. THE PARTY RESPONSIBLE FOR THE EROSION AND SEDIMENT CONTROL MEASURES IS:
    REBEL-UNION PARTNERS, LLC
    ATTN: MARK D'ADABBO
    93 NORTH MAIN STREET
    WEST HARTFORD, CT 06107
    PHONE: 860-729-6812
24. IF WIND EROSION OCCURS, THEN GROUND SHALL BE COVERED WITH CALCIUM CHLORIDE OR WATER TRACK APPLICATIONS AS REQUIRED TO CORRECT THE PROBLEM.

SCALE: NA	CHECKED BY: JPC
DATE: DEC. 28, 2023	DRAWN BY: JMP
JOB No.:3470	ACAD FILE: 3470-ES-NTES
SHEET: 7 OF: 15	
REVISIONS: MARCH 02, 2024 PER PEER REVIEW AND PLANNER COMMENTS	

HALLISEY, PEARSON & CASSIDY
CIVIL ENGINEERS & LAND SURVEYORS
630 MAIN STREET, UNIT #1A
CROMWELL, CONNECTICUT 06416
PHONE: (860)-529-6812, FAX: (860)-721-7709

EROSION & SEDIMENT CONTROL NOTES
PREPARED FOR
REBEL-UNION PARTNERS, LLC
PROPERTY LOCATED AT
BRONCOS HIGHWAY (RT. #102)
BURRILLVILLE, RHODE ISLAND

JOHN PAUL GARCIA
No. 7649
REGISTERED PROFESSIONAL ENGINEER CIVIL
John Paul Garcia 7649

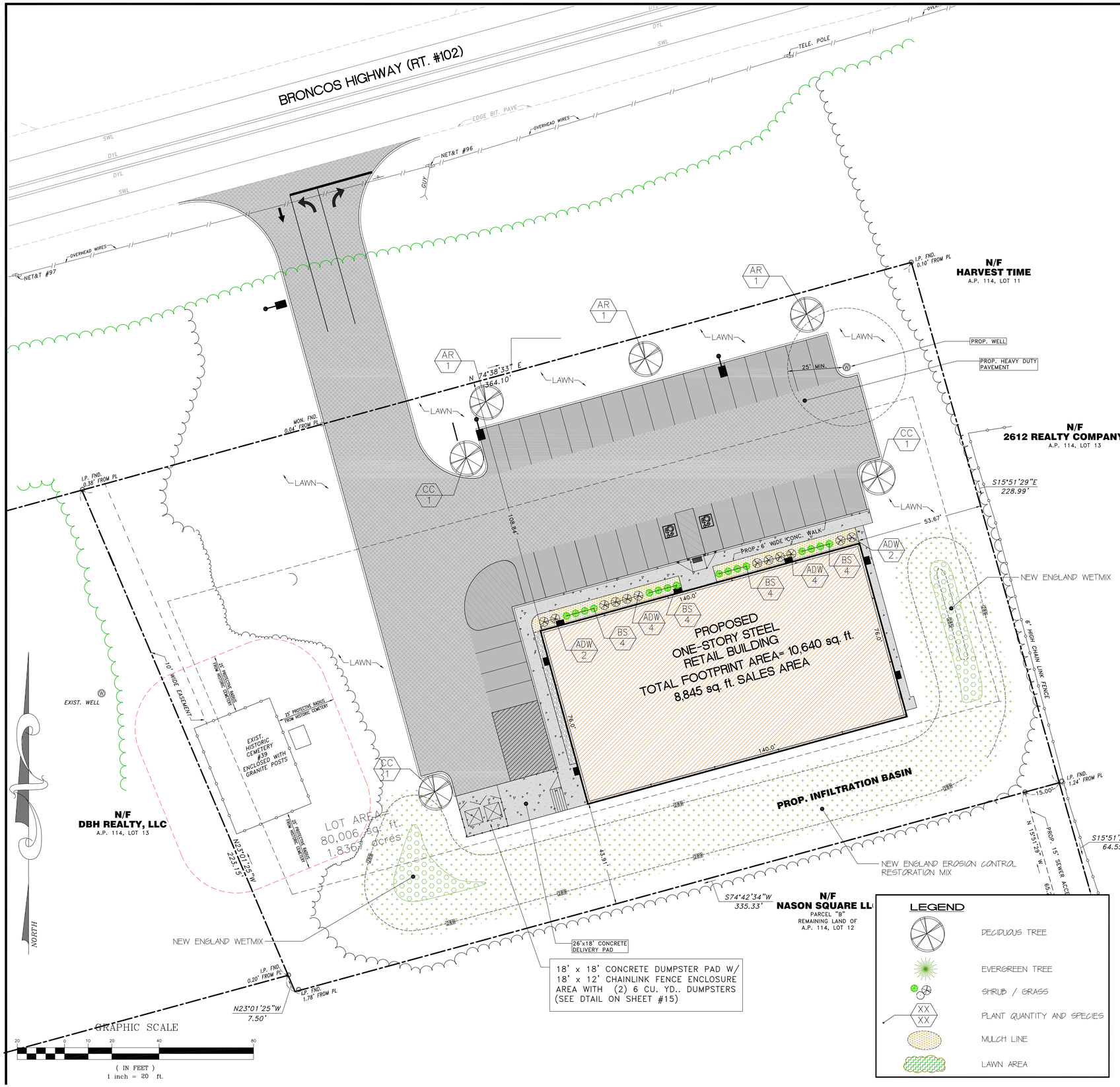

PLANT LIST:

KEY	BOTANICAL NAME	COMMON NAME	QUANITY	SIZE
TREES				
AS	ACER SACCHARUM	SUGAR MAPLE	3	6'-7' HGT.
CF	CORNUS FLORIDA	FLOWERING DOGWOOD	5	15"-2" CALIP.
SHRUBS				
BS	BUXUS SEMPERVIRENS	BOXWOOD	8	3 GALLON
ADW	AZALEA 'DELEWARE WHITE'	DELEWARE VALLEY WHITE AZALEA	8	24" HGT.

PLANT NOTES:

1. ALL PLANTING MATERIAL TO BE NURSERY GROWN STOCK TO A.A.N. STANDARDS.

2. THE CONTRACTOR SHALL SUPPLY ALL PLANTS IN QUANTITIES SUFFICIENT TO COMPLETE THE WORK SHOWN ON THE DRAWINGS AND LISTED IN THE PLANT LIST. IN THE EVENT OF A DISCREPANCY BETWEEN QUALITIES SHOWN IN THE PLANT LIST AND THOSE REQUIRED BY THE DRAWING, THE LARGER NUMBER SHALL APPLY.

3. ALL PLANTS SHALL BE APPROVED PRIOR TO INSTALLATION AND SHALL BE LOCATED ON SITE BY THE CONTRACTOR FOR APPROVAL OF THE LANDSCAPE ARCHITECT OF CIVIL ENGINEER. ANY INSTALLATIONS WHICH WERE NOT APPROVED BY THE LANDSCAPE ARCHITECT OR THE CIVIL ENGINEER AND WHICH ARE SUBSEQUENTLY REQUIRED TO BE MOVED WILL BE DONE AT THE CONTRACTORS EXPENSE.

4. PRECISE LOCATION OF ITEMS NOT DIMENSIONED ON AND PLAN ARE TO BE FIELD STAKED BY THE CONTRACTOR AND SHALL BE SUBJECT TO THE REQUIREMENTS IN THE PREVIOUS NOTE.

5. ALL SHRUB MASSING AND TREE PITS SHALL BE MULCHED TO A DEPTH OF 3" WITH SHREDDED PINE BARK MULCH.

6. TREES SHALL NOT BE STAKED UNLESS OTHERWISE NOTED.

7. THE CONTRACTOR IS RESPONSIBLE FOR ANY DAMAGE VEGETATION AND SHALL REPLACE OR REPAIR ANY DAMAGED MATERIAL, AT HIS OWN EXPENSE. THE CONTRACTOR SHALL CONTACT "CALL BEFORE YOU DIG" AT 811 PRIOR TO CONSTRUCTION.

8. ALL SHRUBS AND GROUND COVER PLANTING AREAS SHALL BE HAVE CONTINUOUS BEDS OF TOPSOIL 12" DEEP. ALL LAWN AREAS SHOULD HAVE A MINIMUM TOPSOIL BED OF 6".

9. THE CONTRACTOR IS RESPONSIBLE FOR LOCATING ALL UTILITIES IN THE FILED. WERE PLANT MATERIAL MAY INTERFERE WITH UTILITIES, THE CONTRACTOR SHALL NOTIFY THE LANDSCAPE ARCHITECT OR CIVIL ENGINEER TO COORDINATE THEIR INSTALLATION.

10. FOR PLANTING SOIL MIX, SEE SPECIFICATIONS OR PLANTING DETAILS.

11. ALL EXISTING RILL, GULL OR CHANNEL EROSION SHALL BE FILLED WITH APPROPRIATE BACKFILL MATERIAL, FINE RAKED, SCARIFIED AND STABILIZED WITH APPROPRIATE VEGETATIVE MATERIAL AND/OR APPROPRIATE SEDIMENTATION AND EROSION CONTROL MEASURES.

12. ADJUSTMENTS IN THE LOCATIONS OF THE PROPOSED PLANT MATERIAL AS A RESULT OF EXISTING VEGETATION TO REMAIN SHALL BE APPROVED BY THE LANDSCAPE ARCHITECT PRIOR TO INSTALLATION.

13. THE CONTRACTOR IS RESPONSIBLE FOR ALL MAINTENANCE REPAIR AND REPLACEMENT OF PLANT MATERIAL, AS REQUIRED, FOR THE DURATION OF THE PROJECT AND SUBSEQUENT WARRANTY PERIOD.

14. PLANTINGS INSTALLED IN THE DRY SUMMER MONTHS AND / OR LAWN SEEDED OUT OF SPRING OR FALL PERIODS, IF ALLOWED BY OWNER, WILL REQUIRE AGGRESSIVE IRRIGATION PROGRAMS AT THE CONTRACTOR'S EXPENSE, UNLESS DIRECTED BY THE OWNER.

15. UPON COMPLETION OF PLANTING, REMOVE FROM SITE ALL EXCESS SOIL, MULCH, AND MATERIALS AND DEBRIS RESULTING FROM WORK OPERATIONS. CLEAN UP SHOULD BE COMPLETED AT THE END OF EACH WORKING DAY. RESTORE TO ORIGINAL CONDITIONS ALL DAMAGED PAVEMENTS, PLANTING AREAS, STRUCTURES AND LAWN AREAS RESULTING FROM LANDSCAPING OPERATIONS.

16. CONTRACTOR SHALL SURVEY, LOCATE, AND PROTECT ALL TREES WITHIN AREAS SHOWN AS "EXISTING VEGETATION TO REMAIN" WITHIN THE DEVELOPMENT ENVELOPE FOR REVIEW BY LANDSCAPE ARCHITECT OR CIVIL ENGINEER PRIOR TO CLEARING OPERATIONS.

17. CONTRACTOR TO RESEED ALL DISTURBED AREAS.

SEEDING AND MULCHING SPECIFICATIONS:

SEEDING MAY BE OF A PERMANENT OR TEMPORARY TYPE DEPENDING ON THE TIME OF YEAR. IT IS DONE. PERMANENT SEEDING SHOULD BE DONE DURING THE PERIODS OF APRIL 1 THROUGH JUNE 1 OR AUGUST 15 THROUGH SEPTEMBER 1.

DISTURBED AREA THAT ARE TO BE RESEEDED SHALL BE TOPSOILED, LIMED & FERTILIZED PRIOR TO RESEEDING. LABORATORY TESTING OF THE TOPSOIL IS RECOMMENDED TO DETERMINE RATES OF APPLICATION FOR THE LIME AND FERTILIZER. LACKING SUCH TESTING THE FOLLOWING ARE RECOMMENDED:

LIME 2 TONS/ACRE (90 lbs./1000 sq. ft.)
FERTILIZER (10-10-10) (75 lbs./1000 sq. ft.)

SEEDING RECOMMENDATIONS ARE AS FOLLOWS:

TEMPORARY -ANNUAL RYEGRASS @40LBS/ACRE

PERMANENT -KENTUCKY BLUE GRASS @20LBS/ACRE
CREEPING RED FESCUE @20LBS/ACRE
PERENNIAL RYEGRASS @5LBS/ACRE
TOTAL 45LBS/ACRE

-MULCHING SHALL BE OF A TEMPORARY TYPE, TO PROTECT THE SOIL & SEED FROM EROSION AND TO ALSO PROMOTE PLANT GROWTH. MULCHING SHALL BE DONE AFTER FINAL GRADING AND SEEDING.

-MULCHING RECOMMENDATION ARE AS FOLLOWS:
-STRAW OR HAY (FREE FROM WEEDS AND COARSE MATTER)
SPREAD WITH MULCH BLOWER OR BY HAND
APPLY @ RATE OR 70 - 90 LBS/100 SQ. FT.

INSTALLATION SCHEDULE and MAINTENANCE PLAN:

1. PLANTING ONLY UNDER FAVORABLE WEATHER CONDITIONS. PLANTING WILL NOT BE PERMITTED WHEN GROUND IS FROZEN OR EXCESSIVELY MOIST.
DECIDUOUS MATERIAL
SPRING: MARCH 21 TO JUNE 01.
FALL: SEPT. 01 TO NOV. 01
- IF PLANTING DURING PEAK SUMMER MONTHS OF JULY AND AUGUST, CONTRACTOR SHALL AGGRESSIVELY IRRIGATE PLANTS TO ENSURE ESTABLISHMENT AND SURVIVAL.

2. DO NOT PLANT WHEN GROUND IS FROZEN, SNOW COVERED, OR MUDDY.

3. THE CONTRACTOR IS RESPONSIBLE FOR ALL MAINTENANCE REPAIR AND REPLACEMENT OF PLANT MATERIAL AS REQUIRED, FOR THE DURATION OF THE PROJECT AND SUBSEQUENT PERIOD OF ONE FULL YEAR FROM COMMENCEMENT OF PLANT INSTALLATION.

SCALE: 1"=20' | CHECKED BY: JPC
DATE: DEC. 28, 2023 | DRAWN BY: JMP
JOB No.: 3470 | ACAD FILE: 3470-ZI-SL
SHEET: LS- 1 OF:
REVISIONS:
MARCH 02, 2024 PER PEER REVIEW AND PLANNER COMMENTS

HALLISEY, PEARSON & CASSIDY
CIVIL ENGINEERS & LAND SURVEYORS
630 MAIN STREET, UNIT #1A
CROMWELL, CONNECTICUT 06416
PHONE: (860)-529-6812, FAX: (860)-721-7709

SITE LANDSCAPING PLAN
PREPARED FOR
REBEL-UNION PARTNERS, LLC
PROPERTY LOCATED AT
BRONCOS HIGHWAY (RT. #102)
BURRILLVILLE, RHODE ISLAND

JOHN PAUL GARCIA
No. 7649
REGISTERED PROFESSIONAL ENGINEER CIVIL
John Paul Garcia #7649

LEGEND

- EXISTING PROPERTY LINE
- EXISTING EDGE OF PAVEMENT
- I.P. FND. or I.PIPE FND. — IRON PIN OR IRON PIPE FOUND
- C.M.S. FND. or C.H.D. FND. — CONC. MERESTONE OR CHD FND.
- EXISTING TREE LINE
- 412 — EXISTING CONTOUR
- x 134.4 — EXISTING SPOT GRADE
- POLE # — EXISTING TELEPHONE POLE
- EXISTING BIT. CURB
- C.B. PIPE (SIZE, TYPE) — EXISTING STORM DRAINAGE SYSTEM
- EXISTING WATER MAIN
- TP # — SOIL TEST LOCATION
- EXISTING FENCE
- C.B. PIPE (SIZE, TYPE) — PROPOSED STORM DRAINAGE SYSTEM
- PROPOSED WATER MAIN
- 412 — PROPOSED CONTOUR
- 412.9 — PROPOSED SPOT GRADE
- PROPOSED TREE LINE
- PROPOSED BIT. CURB
- AREA OF LIGHT DUTY PAVEMENT
- AREA OF HEAVY DUTY PAVEMENT
- 4" 4" — PROPOSED CONCRETE

SEE SHEET #6 FOR SITE NOTES

GRAPHIC SCALE

30 0 15 30 60 120

(IN FEET)
1 inch = 30 ft.

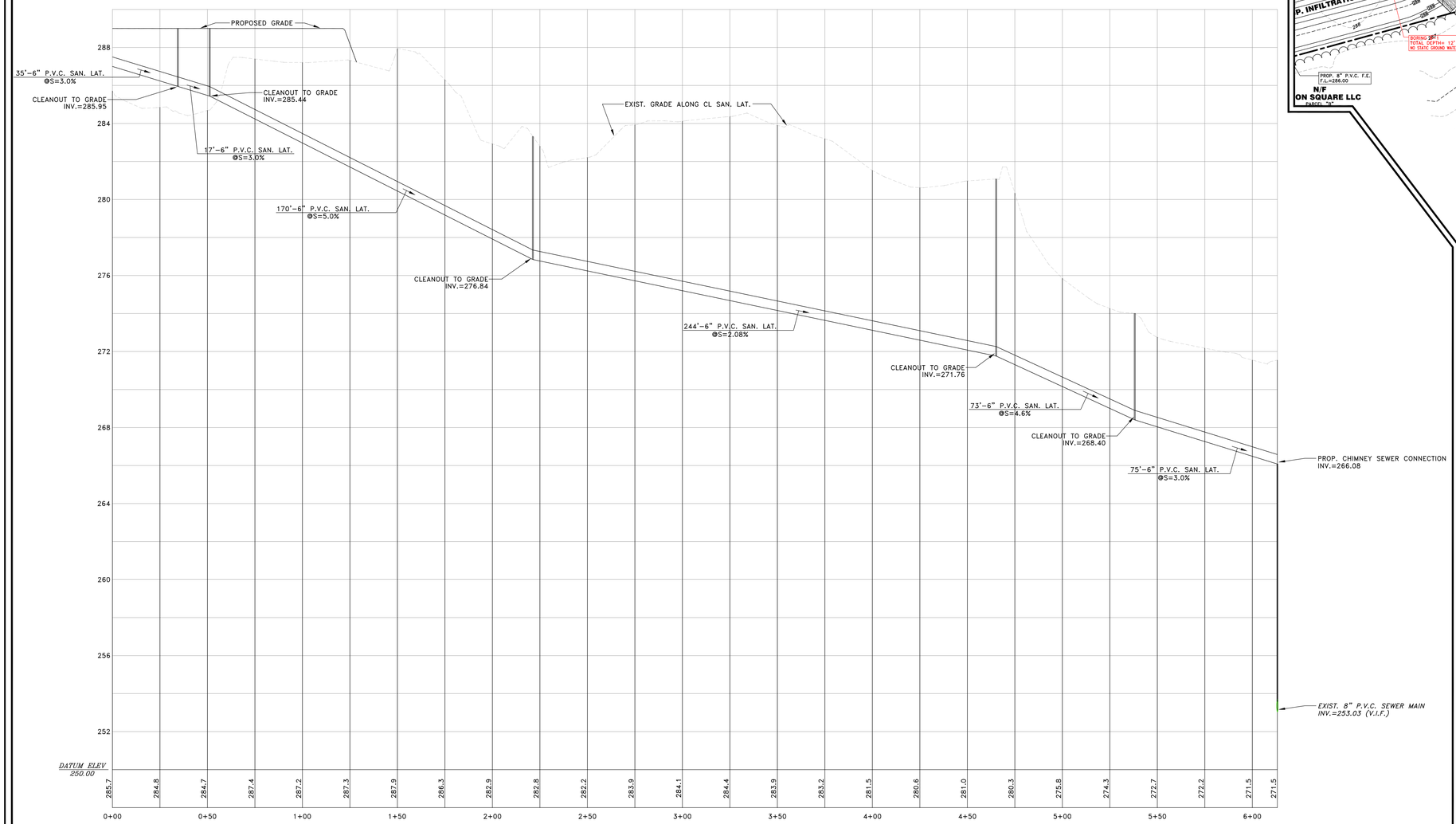

SANITARY SEWER LATERAL PROFILE

SCALE: HORIZ.: 1"=30'
VERT.: 1"=3'

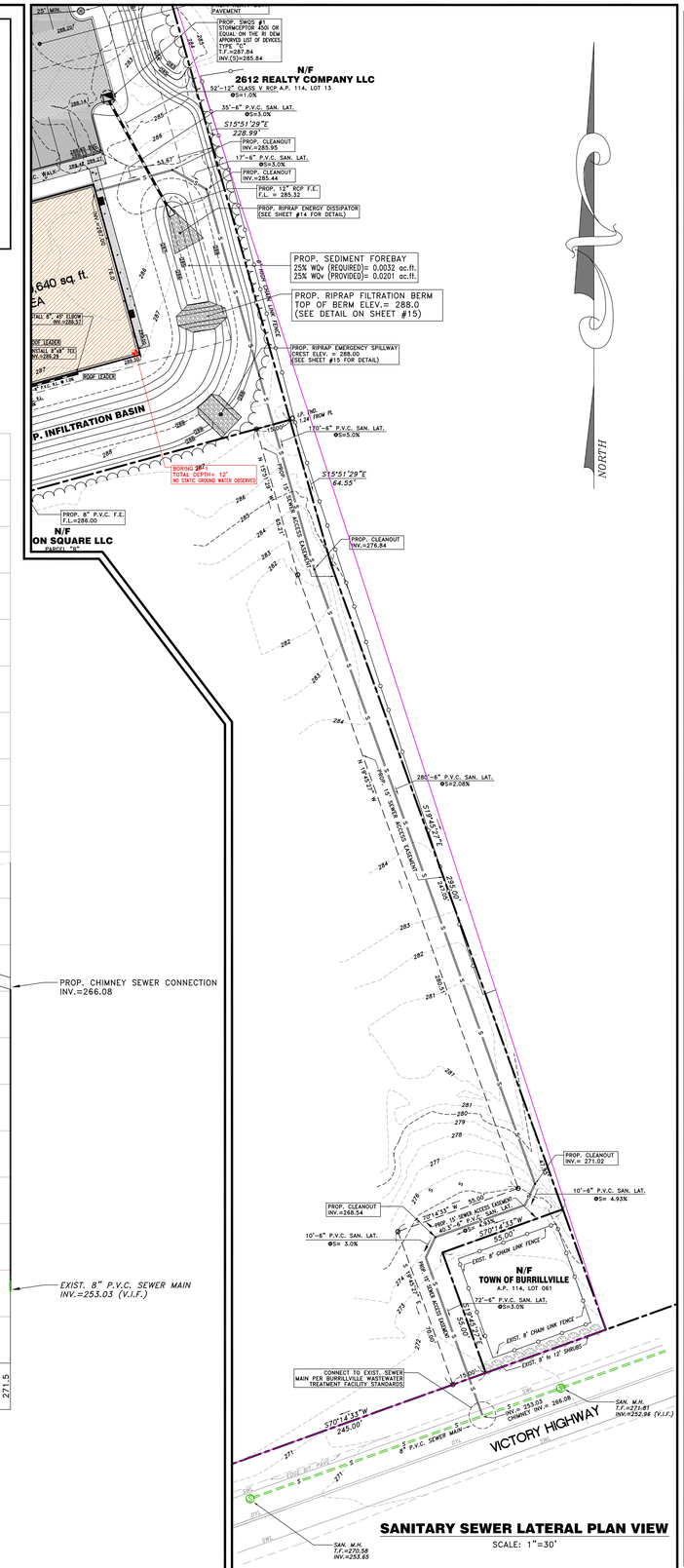

SANITARY SEWER LATERAL PLAN VIEW

SCALE: 1"=30'

SCALE: 1"=30'
DATE: DEC. 28, 2023
JOB No.: 3470
CHECKED BY: JPC
DRAWN BY: JMP
ACAD FILE: 3470-SEWE-PR
SHEET: 9 OF: 15

REVISIONS:
1. REVISED SEWER EASEMENT
MARCH 02, 2024 PEER REVIEW AND PLANNER COMMENTS

HALLISEY, PEARSON & CASSIDY
CIVIL ENGINEERS & LAND SURVEYORS
630 MAIN STREET, UNIT #1A
CROMWELL, CONNECTICUT 06416
PHONE: (860)-529-6812, FAX: (860)-721-7709

SANITARY SEWER PLAN & PROFILE
PREPARED FOR
REBEL-UNION PARTNERS, LLC
PROPERTY LOCATED AT
BRONCOS HIGHWAY (RT. #102)
BURRILLVILLE, RHODE ISLAND

JOHN PAUL GARCIA
No. 7649
REGISTERED PROFESSIONAL ENGINEER
CIVIL
John Paul Garcia 7649

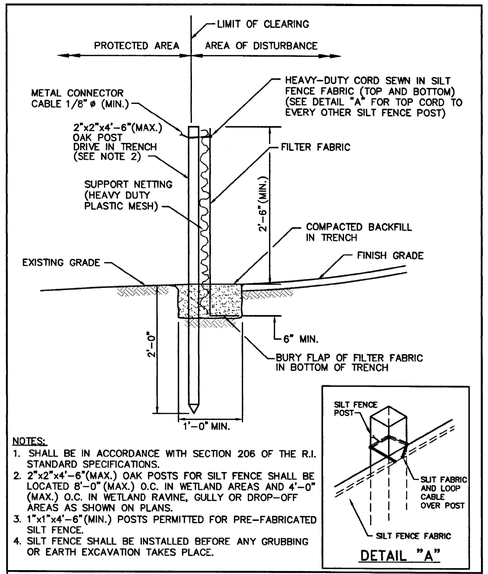

DETAIL "A"

NOTES:
1. SHALL BE IN ACCORDANCE WITH SECTION 206 OF THE R.I. STANDARD SPECIFICATIONS.
2. 2"x2"x4'-6"(MAX.) OAK POSTS FOR SILT FENCE SHALL BE LOCATED 8'-0" (MAX.) O.C. IN WETLAND AREAS AND 4'-0" (MAX.) O.C. IN WETLAND RAVINE, GULLY OR DROP-OFF AREAS AS SHOWN ON PLANS.
3. 1"x1"x4'-6"(MIN.) POSTS PERMITTED FOR PRE-FABRICATED SILT FENCE.
4. SILT FENCE SHALL BE INSTALLED BEFORE ANY GRUBBING OR EARTH EXCAVATION TAKES PLACE.

RHODE ISLAND DEPARTMENT OF TRANSPORTATION

REVISIONS		
NO.	BY	DATE

SILT FENCE DETAIL

CHIEF ENGINEER TRANSPORTATION — CHIEF DESIGN ENGINEER TRANSPORTATION — JUNE 15, 1998 ISSUE DATE

R.I. STANDARD 9.2.0

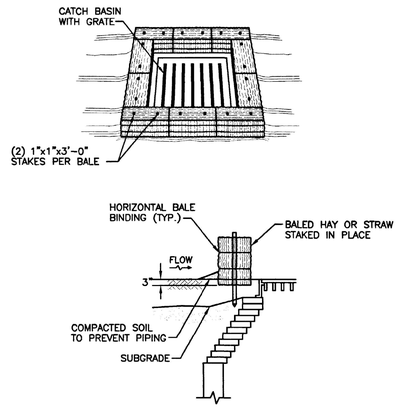

NOTES:
1. SHALL BE IN ACCORDANCE WITH SECTION 209 OF THE R.I. STANDARD SPECIFICATIONS.
2. THIS INLET PROTECTION CAN ALSO BE USED WHEN CONSTRUCTION SEQUENCING REQUIRES A CATCH BASIN TO BE EXPOSED TO SEDIMENT FROM THE SUBGRADE. THIS WILL BE ACHIEVED BY INSTALLING THE BALED HAY AS SHOWN ON THIS DETAIL INTO THE SUBGRADE.
3. THE PERIMETER CONFIGURATION OF THE BALED HAY WILL VARY DEPENDING ON THE PARTICULAR TYPE OF CATCH BASIN INLET BEING CONSTRUCTED. THE ENGINEER WILL PROVIDE SPECIFIC DIRECTION IN SUCH CASES.

RHODE ISLAND DEPARTMENT OF TRANSPORTATION

REVISIONS		
NO.	BY	DATE

BALED HAY CATCH BASIN INLET PROTECTION

CHIEF ENGINEER TRANSPORTATION — CHIEF DESIGN ENGINEER TRANSPORTATION — JUNE 15, 1998 ISSUE DATE

R.I. STANDARD 9.8.0

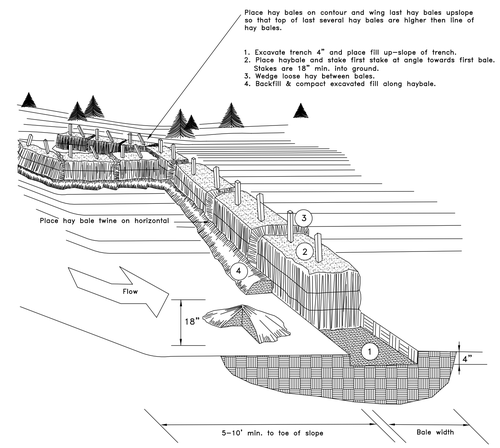

TOE OF SLOPE HAY BALE BARRIER

NO SCALE

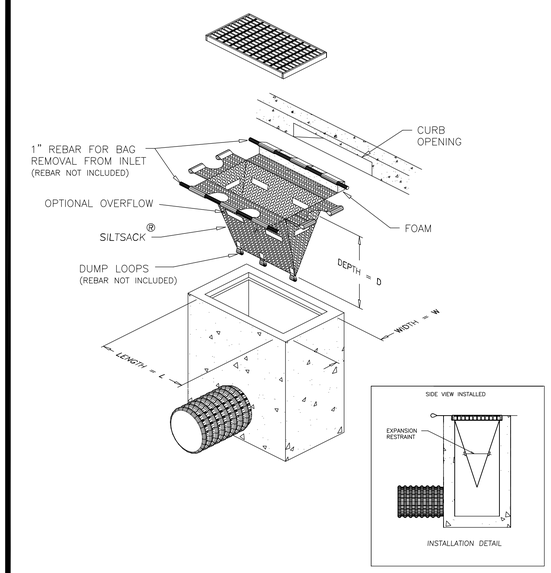

DETAIL OF INLET SEDIMENT CONTROL DEVICE WITH CURB DEFLECTOR

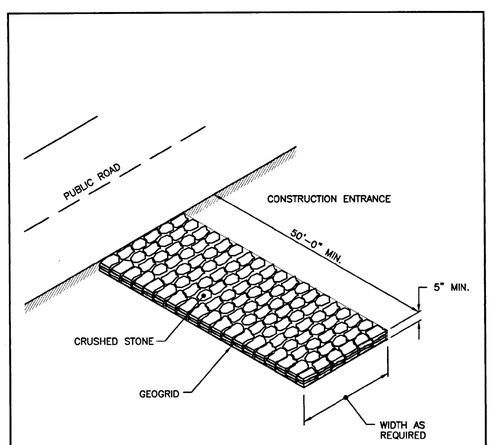

NOTE:
SHALL BE IN ACCORDANCE WITH SECTION 211 OF THE R.I. STANDARD SPECIFICATIONS.

RHODE ISLAND DEPARTMENT OF TRANSPORTATION

REVISIONS		
NO.	BY	DATE

CONSTRUCTION ACCESS

CHIEF ENGINEER TRANSPORTATION — CHIEF DESIGN ENGINEER TRANSPORTATION — JUNE 15, 1998 ISSUE DATE

R.I. STANDARD 9.9.0

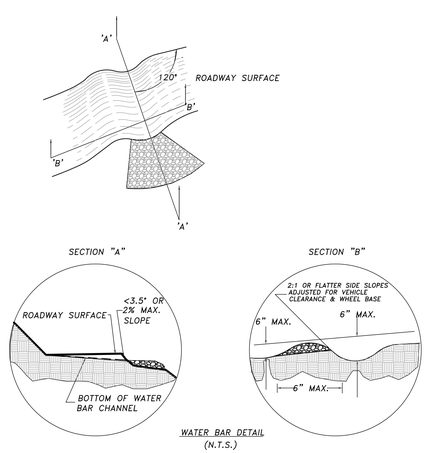

WATER BAR DETAIL
(N.T.S.)

SLOPE INSTALLATION

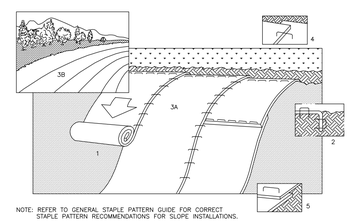

NOTE: REFER TO GENERAL STAPLE PATTERN GUIDE FOR CORRECT STAPLE PATTERN RECOMMENDATIONS FOR SLOPE INSTALLATIONS.

1. PREPARE SOIL BEFORE INSTALLING BLANKETS, INCLUDING APPLICATION OF LIME, FERTILIZER, AND SEED. NOTE: WHEN USING CELL-O-SEED DO NOT SEED PREPARED AREA. CELL-O-SEED MUST BE INSTALLED WITH PAPER SIDE DOWN.
2. BEGIN AT THE TOP OF THE SLOPE BY ANCHORING THE BLANKET IN 6" DEEP X 6" WIDE TRENCH. BACKFILL AND COMPACT THE TRENCH AFTER STAPLING.
3. ROLL THE BLANKETS (A.) DOWN OR (B.) HORIZONTALLY ACROSS THE SLOPE.
4. THE EDGES OF PARALLEL BLANKETS MUST BE STAPLED WITH APPROXIMATELY 2" OVERLAP.
5. WHEN BLANKETS MUST BE SPLICED DOWN THE SLOPE, PLACE BLANKETS END OVER END (SHINGLE STYLE) WITH APPROXIMATELY 4" OVERLAP. STAPLE THROUGH OVERLAPPED AREA, APPROXIMATELY 12" APART.

14649 HIGHWAY 41 NORTH, EVANSVILLE, INDIANA 47711
USA 1-800-772-2040 CANADA 1-800-448-2040

NORTH AMERICAN GREEN

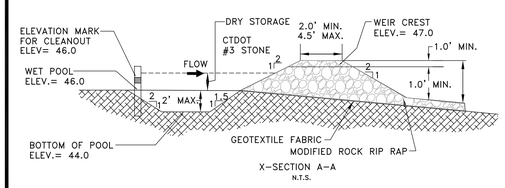

X-SECTION A-A
N.T.S.

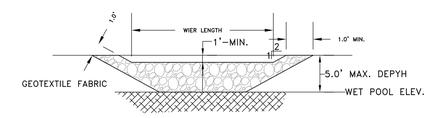

X-SECTION B-B

TEMPORARY SEDIMENT TRAP
N.T.S.

SCALE: AS SHOWN	CHECKED BY: JPC
DATE: DEC. 28, 2023	DRAWN BY: JMP
JOB No.: 3470	ACAD FILE: 3470-DET

SHEET: 10 OF: 15

REVISIONS: PER RI DOT REVIEW AND PLANNER COMMENTS

HALLISEY, PEARSON & CASSIDY
CIVIL ENGINEERS & LAND SURVEYORS
630 MAIN STREET, UNIT #1A
CROMWELL, CONNECTICUT 06416
PHONE: (860)-529-6812, FAX: (860)-721-7709

SITE DETAILS
PREPARED FOR
REBEL-UNION PARTNERS, LLC
PROPERTY LOCATED AT
BRONCOS HIGHWAY (RT. #102)
BURRILLVILLE, RHODE ISLAND

JOHN PAUL GARCIA
No. 7649
REGISTERED PROFESSIONAL ENGINEER CIVIL

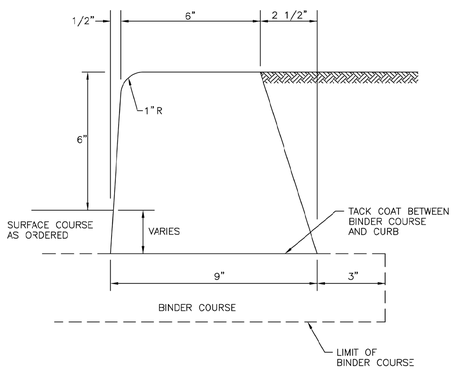

NOTE:
SHALL BE IN ACCORDANCE WITH SECTION 906 OF THE R.I. STANDARD SPECIFICATIONS.

RHODE ISLAND DEPARTMENT OF TRANSPORTATION

REVISIONS		
NO.	BY	DATE
1	MLP	Mar 05

BITUMINOUS CONCRETE LIP CURB

CHIEF ENGINEER TRANSPORTATION — CHIEF DESIGN ENGINEER TRANSPORTATION — JUNE 15, 1998 ISSUE DATE

R.I. STANDARD 7.5.0

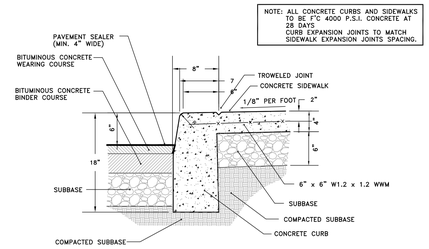

CONCRETE CURB DETAIL
WITH MONOLITHIC SIDEWALK ONSITE

N.T.S.

NOTES:
1. REINFORCING STEEL DEFORMED BARS CONFORM TO LATEST ASTM SPECIFICATION A615, GRADE 60 2" MIN. COVER.
2. CONCRETE COMPRESSIVE STRENGTH- 4,000 PSI AT 28 DAYS SELF COMPACTING CONCRETE MIX.
3. METHOD OF MANUFACTURE: WET CAST.

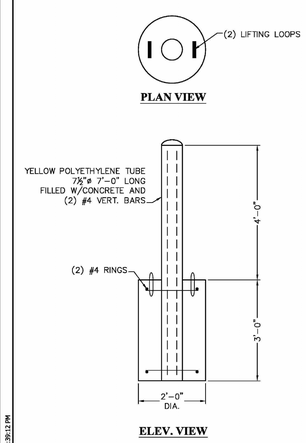

(6)- 7' BOLLARDS @ 4' SPACING
FOR PROPANE TANK PROTECTION
(SEE SITE PLAN FOR LOCATIONS)

WEIGHT CHART	
PRODUCT	APPROX. WEIGHT
BASE	1,600 LBS.

UNITED CONCRETE PRODUCTS, Inc.
173 CHURCH STREET
YALESVILLE, CT 06492
TEL: (203)-269-3119
FAX: (203)-265-4941

24" DIA. x 3'-3" BASE WITH 7 1/2" DIA. x 7'-0" LG. BOLLARD

CUSTOMER		SCALE	NONE
JOB		DATE	6/22/09
LOCATION		DRW	DH
		CHK	JLT

SHEET B-1

Z:\Acad Drawings\Drawing Templates\Lamp Bases\Bollard.dwg, 6/17/2009 2:39:12 PM

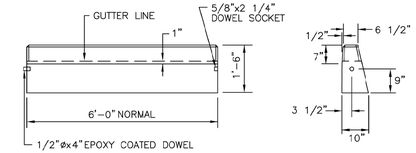

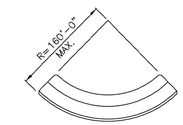

CIRCULAR CURB

NOTES:
1. SHALL BE IN ACCORDANCE WITH SECTION 906 OF THE R.I. STANDARD SPECIFICATIONS.
2. MINIMUM LENGTH OF STRAIGHT OR CIRCULAR FILLER PIECES TO BE 3'-0".
3. EXPOSED SURFACES TO HAVE A SPONGE FLOAT FINISH.
4. CIRCULAR CURB IS REQUIRED ON CURVES WITH RADII OF 160'-0" OR LESS. STRAIGHT CURB TO BE USED ON CURVES OF MORE THAN 160'-0" RADIUS.
5. EXPOSED EDGES TO HAVE A 3/4" CHAMFER.

RHODE ISLAND DEPARTMENT OF TRANSPORTATION

REVISIONS		
NO.	BY	DATE
1	MLP	Mar 05

PRECAST CONCRETE CURB

CHIEF ENGINEER TRANSPORTATION — CHIEF DESIGN ENGINEER TRANSPORTATION — JUNE 15, 1998 ISSUE DATE

R.I. STANDARD 7.1.0

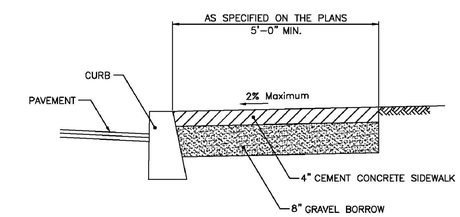

NOTES
1. SHALL BE IN ACCORDANCE WITH SECTION 905 OF THE R.I. STANDARD SPECIFICATIONS.
2. FOR CURB SETTING DETAIL REFERENCE STD. 7.6.0.

RHODE ISLAND DEPARTMENT OF TRANSPORTATION

REVISIONS		
NO.	BY	DATE
1	MLP	3/1/05
2	MLP	06/01/10

CEMENT CONCRETE SIDEWALK

CHIEF ENGINEER TRANSPORTATION — CHIEF DESIGN ENGINEER TRANSPORTATION — JUNE 15, 1998 ISSUE DATE

R.I. STANDARD 43.1.0

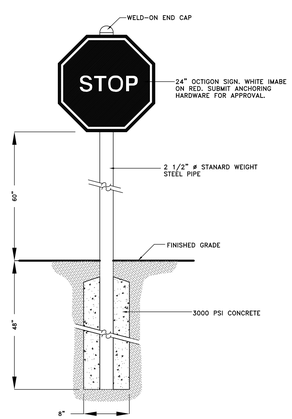

1

STOP SIGNAGE DETAIL
N.T.S.

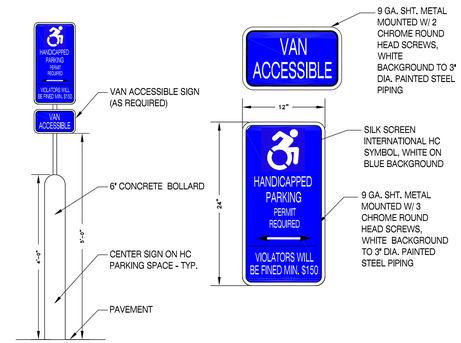

2

HANDICAPPED PARKING SIGN DETAIL
NO SCALE

SCALE: AS SHOWN | CHECKED BY: JPC
DATE: DEC. 28, 2023 | DRAWN BY: JMP
JOB No.: 3470 | ACAD FILE: 3470-DET
SHEET: 11 OF: 15
REVISIONS: MINOR REL. CHANGES PER REVIEW AND PLANNER COMMENTS

HALLISEY, PEARSON & CASSIDY
CIVIL ENGINEERS & LAND SURVEYORS
630 MAIN STREET, UNIT #1A
CROMWELL, CONNECTICUT 06416
PHONE: (860)-529-6812, FAX: (860)-721-7709

SITE DETAILS
PREPARED FOR
REBEL-UNION PARTNERS, LLC
PROPERTY LOCATED AT
BRONCOS HIGHWAY (RT. #102)
BURRILLVILLE, RHODE ISLAND

JOHN PAUL GARCIA
No. 7649
REGISTERED PROFESSIONAL ENGINEER CIVIL
John Paul Garcia 7649

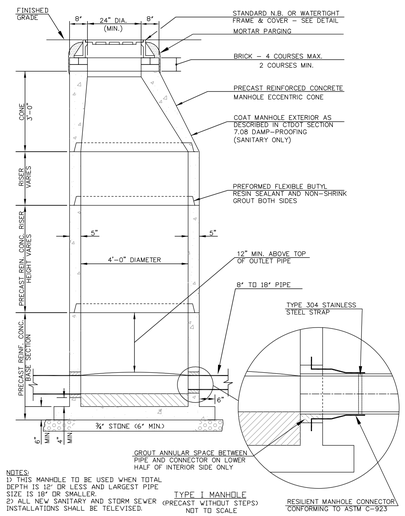

NOTES:
1) THIS MANHOLE TO BE USED WHEN TOTAL DEPTH IS 12' OR LESS AND LARGEST PIPE SIZE IS 18" OR SMALLER.
2) ALL NEW SANITARY AND STORM SEWER INSTALLATIONS SHALL BE TELEVISED.

TYPE 1 MANHOLE
(PRECAST WITHOUT STEPS)
NOT TO SCALE

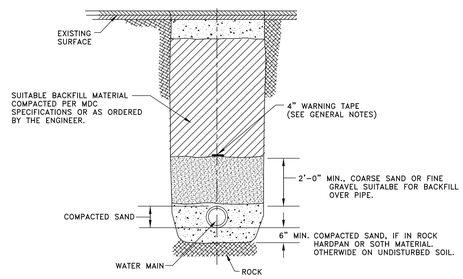

TYPICAL WATER TRENCH SECTION
N.T.S.

STORMCEPTOR DESIGN NOTES

THE STANDARD STC450i CONFIGURATION WITH ROUND, SOLID FRAME AND COVER, AND INLET PIPE IS SHOWN. ALTERNATE CONFIGURATIONS ARE AVAILABLE AND ARE LISTED BELOW. SOME CONFIGURATIONS MAY BE COMBINED TO SUIT SITE REQUIREMENTS.

CONFIGURATION DESCRIPTION
GRATED INLET ONLY (NO INLET PIPE)
GRATED INLET WITH INLET PIPE OR PIPES
CURB INLET ONLY (NO INLET PIPE)
CURB INLET WITH INLET PIPE OR PIPES

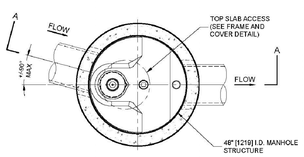

PLAN VIEW
TOP SLAB NOT SHOWN

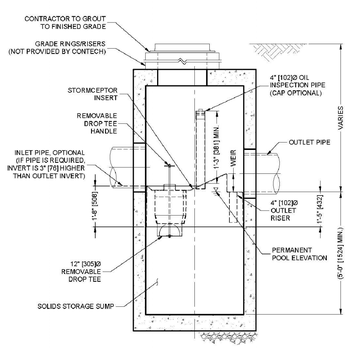

SECTION A-A

Stormceptor®
THE PERFECT INTERCEPTOR. THE TRUSTED STORMWATER SYSTEM

FRAME AND COVER
(MAY VARY)
NOT TO SCALE

FRAME AND GRATE
(MAY VARY)
NOT TO SCALE

SITE SPECIFIC DATA REQUIREMENTS			
STRUCTURE ID			
WATER QUALITY FLOW RATE (cfs [L/s])			
PEAK FLOW RATE (cfs [L/s])			
RETURN PERIOD OF PEAK FLOW (yrs)			
RIM ELEVATION			
PIPE DATA:	INVERT	MATERIAL	DIAMETER
INLET PIPE 1			
INLET PIPE 2			
OUTLET PIPE			
NOTES / SPECIAL REQUIREMENTS:			

GENERAL NOTES
1. CONTECH TO PROVIDE ALL MATERIALS UNLESS NOTED OTHERWISE.
2. FOR SITE SPECIFIC DRAWINGS WITH DETAILED STRUCTURE DIMENSIONS AND WEIGHT, PLEASE CONTACT YOUR CONTECH ENGINEERED SOLUTIONS LLC REPRESENTATIVE. www.ContechES.com
3. STORMCEPTOR WATER QUALITY STRUCTURE SHALL BE IN ACCORDANCE WITH ALL DESIGN DATA AND INFORMATION CONTAINED IN THIS DRAWING. CONTRACTOR TO CONFIRM STRUCTURE MEETS REQUIREMENTS OF PROJECT.
4. STORMCEPTOR STRUCTURE SHALL MEET AASHTO HS20 LOAD RATING, ASSUMING EARTH COVER OF 0' - 2' [610], AND GROUNDWATER ELEVATION AT, OR BELOW, THE OUTLET PIPE INVERT ELEVATION. ENGINEER OF RECORD TO CONFIRM ACTUAL GROUNDWATER ELEVATION. CASTINGS SHALL MEET AASHTO M306 AND BE CAST WITH THE CONTECH LOGO.
5. STORMCEPTOR STRUCTURE SHALL BE PRECAST CONCRETE CONFORMING TO ASTM C478 AND AASHTO LOAD FACTOR DESIGN METHOD.
6. ALTERNATE UNITS ARE SHOWN IN MILLIMETERS [mm].

INSTALLATION NOTES
A. ANY SUB-BASE, BACKFILL DEPTH, AND/OR ANTI-FLOTATION PROVISIONS ARE SITE-SPECIFIC DESIGN CONSIDERATIONS AND SHALL BE SPECIFIED BY ENGINEER OF RECORD.
B. CONTRACTOR TO PROVIDE EQUIPMENT WITH SUFFICIENT LIFTING AND REACH CAPACITY TO LIFT AND SET THE STORMCEPTOR MANHOLE STRUCTURE.
C. CONTRACTOR TO INSTALL JOINT SEALANT BETWEEN ALL STRUCTURE SECTIONS AND ASSEMBLE STRUCTURE.
D. CONTRACTOR TO PROVIDE, INSTALL, AND GROUT INLET AND OUTLET PIPE(S). MATCH PIPE INVERTS WITH ELEVATIONS SHOWN. ALL PIPE CENTERLINES TO MATCH PIPE OPENING CENTERLINES.
E. CONTRACTOR TO TAKE APPROPRIATE MEASURES TO ASSURE UNIT IS WATER TIGHT, HOLDING WATER TO FLOWLINE INVERT MINIMUM. IT IS SUGGESTED THAT ALL JOINTS BELOW PIPE INVERTS ARE GROUTED.

CONTECH® ENGINEERED SOLUTIONS LLC
www.ContechES.com
9025 Centre Pointe Dr., Suite 400, West Chester, OH 45069
800-338-1122 513-645-7000 513-645-7993 FAX

STC450i
STORMCEPTOR
STANDARD DETAIL

I:\COMMON\CAD\TREATMENT\D-STORMCEPTOR\D-STANDARD DRAWINGS\IN PROCESS\STC450i.DWG, 2/10/2019 3:12 PM

SCALE: AS SHOWN | CHECKED BY: JPC
DATE: DEC. 28, 2023 | DRAWN BY: JMP
JOB No.: 3470 | ACAD FILE: 3470-DET
SHEET: 12 OF: 15
REVISIONS: MODIFIED TO CONFORM WITH RI DEP STORMWATER AND RI RUNOFF COMMENTS

HALLISEY, PEARSON & CASSIDY
CIVIL ENGINEERS & LAND SURVEYORS
630 MAIN STREET, UNIT #1A
CROMWELL, CONNECTICUT 06416
PHONE: (860)-529-6812, FAX: (860)-721-7709

SITE DETAILS
PREPARED FOR
REBEL-UNION PARTNERS, LLC
PROPERTY LOCATED AT
BRONCOS HIGHWAY (RT. #102)
BURRILLVILLE, RHODE ISLAND

JOHN PAUL GARCIA
No. 7649
REGISTERED PROFESSIONAL ENGINEER
CIVIL

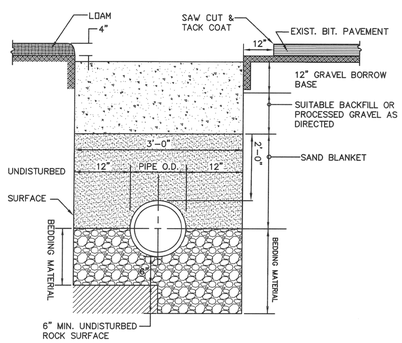

NOTE:
1. MINIMUM DEPTH OF COVER SHALL BE 4'-0"
2. PAVEMENT RESTORATION SHALL CONFORM TO THE DEPARTMENT OF PUBLIC WORKS REQUIREMENTS

Town of Burillville Board of Sewer Commissioners

Figure B-1
TRENCH DETAIL
Sewer Construction Standards
Date: 2009 | Scale: No Scale

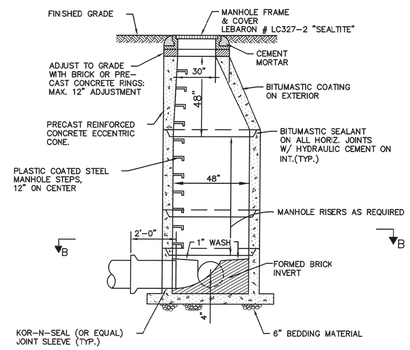

NOTE: ALL LIFTING HOLES TO BE PLUGGED IN AND OUT WITH HYDRAULIC CEMENT.

Town of Burillville Board of Sewer Commissioners

Figure B-3
SEWER MANHOLE DETAIL
Sewer Construction Standards
Date: 2009 | Scale: No Scale

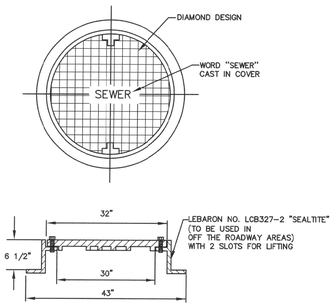

Town of Burillville Board of Sewer Commissioners

Figure B-5
BOLTED & GASKETED FRAME & COVER
Sewer Construction Standards
Date: 2009 | Scale: No Scale

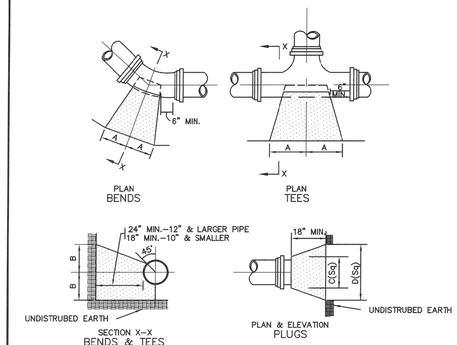

TYPE	SIZE	1/4 BENDS A	1/4 BENDS B	1/8 BENDS A	1/8 BENDS B	1/16 BENDS A	1/16 BENDS B	TEES A	TEES B	PLUGS C	PLUGS D
TYPE 1 200 PSI	6"	5"	10"	6"	8"	3"	8"	8"	8"	10"	15"
	8"	12"	12"	8"	10"	5"	9"	9"	12"	12"	20"
	10"	16"	14"	10"	12"	8"	10"	11"	14"	14"	25"
	12"	19"	16"	12"	14"	8"	11"	14"	16"	16"	30"
	14"	23"	18"	14"	16"	10"	12"	16"	18"	18"	34"
	16"	26"	20"	16"	18"	11"	13"	18"	20"	20"	38"
TYPE 2 200 PSI	6"	16"	10"	9"	10"	6"	8"	10"	12"	10"	21"
	8"	22"	13"	12"	13"	8"	10"	13"	16"	12"	26"
	10"	26"	17"	14"	17"	10"	13"	16"	20"	14"	36"
	12"	29"	21"	16"	21"	11"	16"	18"	24"	16"	41"
	14"	35"	24"	19"	24"	12"	20"	22"	27"	18"	48"
	16"	38"	27"	21"	27"	12"	24"	24"	30"	20"	54"

Town of Burillville Board of Sewer Commissioners

Figure B-12
THRUST BLOCKS
Sewer Construction Standards
Date: 2009 | Scale: No Scale

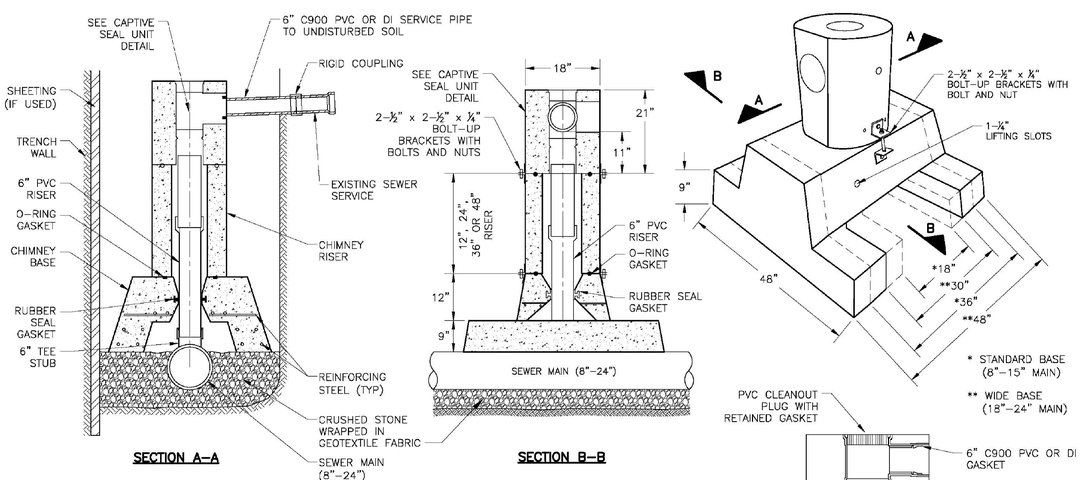

NOTE:

1. REFER TO SEWER TRENCH DETAIL FOR BACKFILL AND SURFACE RESTORATION REQUIREMENTS.

SEWER CHIMNEY DETAIL

NO SCALE

SCALE: AS SHOWN | CHECKED BY: JPC
DATE: DEC. 28, 2023 | DRAWN BY: JMP
JOB No.: 3470 | ACAD FILE: 3470-DET
SHEET: 13 OF: 15
REVISIONS:

HALLISEY, PEARSON & CASSIDY
CIVIL ENGINEERS & LAND SURVEYORS
630 MAIN STREET, UNIT #1A
CROMWELL, CONNECTICUT 06416
PHONE: (860)-529-6812, FAX: (860)-721-7709

SITE DETAILS
PREPARED FOR
REBEL-UNION PARTNERS, LLC
PROPERTY LOCATED AT
BRONCOS HIGHWAY (RT. #102)
BURRILLVILLE, RHODE ISLAND

JOHN PAUL GARCIA
No. 7649
REGISTERED PROFESSIONAL ENGINEER
CIVIL

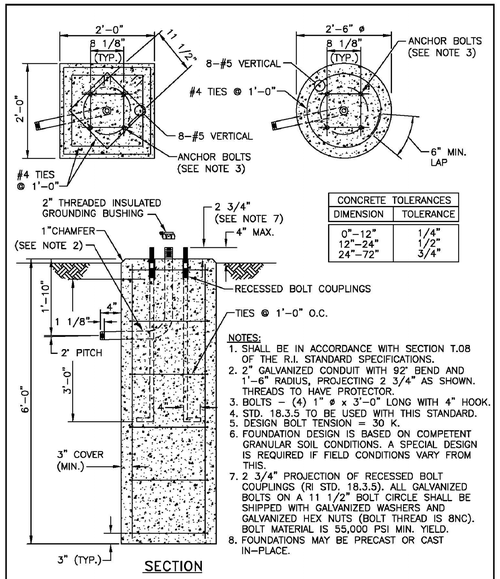

CONCRETE TOLERANCES	
DIMENSION	TOLERANCE
0"-12"	1/4"
12"-24"	1/2"
24"-72"	3/4"

NOTES:
1. SHALL BE IN ACCORDANCE WITH SECTION T.08 OF THE R.I. STANDARD SPECIFICATIONS.
2. 2" GALVANIZED CONDUIT WITH 92° BEND AND 1'-6" RADIUS, PROJECTING 2 3/4" AS SHOWN. THREADS TO HAVE PROTECTOR.
3. BOLTS – (4) 1" ø x 3'-0" LONG WITH 4" HOOK.
4. STD. 18.3.5 TO BE USED WITH THIS STANDARD.
5. DESIGN BOLT TENSION = 30 K.
6. FOUNDATION DESIGN IS BASED ON COMPETENT GRANULAR SOIL CONDITIONS. A SPECIAL DESIGN IS REQUIRED IF FIELD CONDITIONS VARY FROM THIS.
7. 2 3/4" PROJECTION OF RECESSED BOLT COUPLINGS (RI STD. 18.3.5). ALL GALVANIZED BOLTS ON A 11 1/2" BOLT CIRCLE SHALL BE SHIPPED WITH GALVANIZED WASHERS AND GALVANIZED HEX NUTS (BOLT THREAD IS 8NC). BOLT MATERIAL IS 55,000 PSI MIN. YIELD.
8. FOUNDATIONS MAY BE PRECAST OR CAST IN-PLACE.

SECTION

RHODE ISLAND DEPARTMENT OF TRANSPORTATION

REVISIONS		
NO.	BY	DATE
1	MLP	6/27/08

CONCRETE LIGHT STANDARD BASE

CHIEF ENGINEER TRANSPORTATION — CHIEF DESIGN ENGINEER TRANSPORTATION — JUNE 15, 1998 ISSUE DATE

R.I. STANDARD 18.1.0

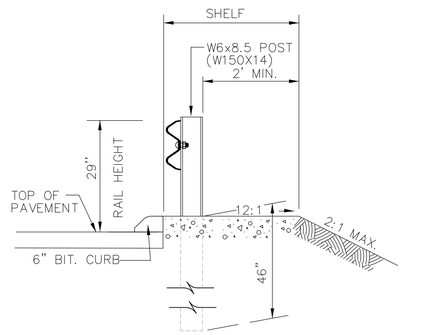

CURB APPLICATION

N.T.S.

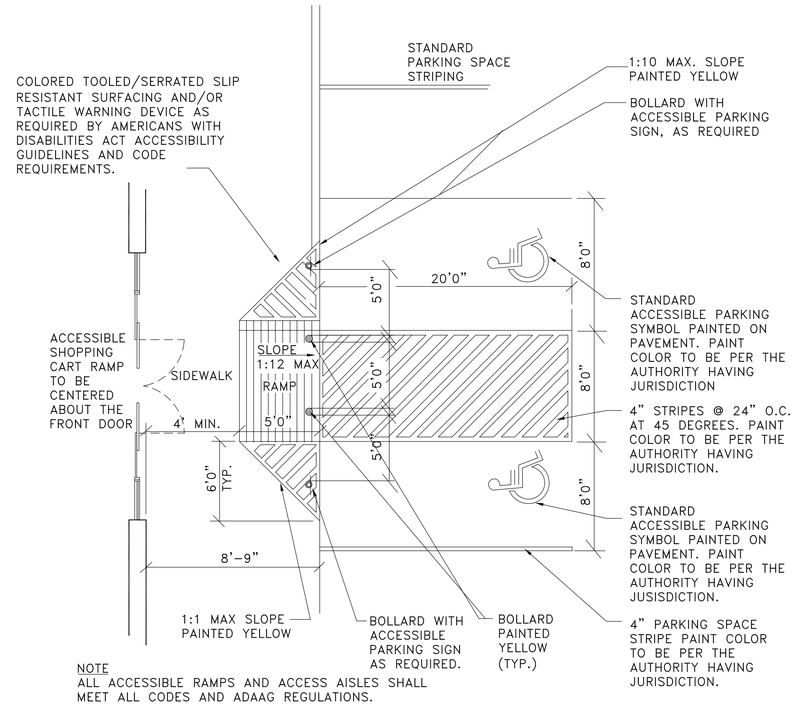

NOTE
ALL ACCESSIBLE RAMPS AND ACCESS AISLES SHALL MEET ALL CODES AND ADAAG REGULATIONS.

ACCESSIBLE PARKING DETAIL

SCALE: NTS

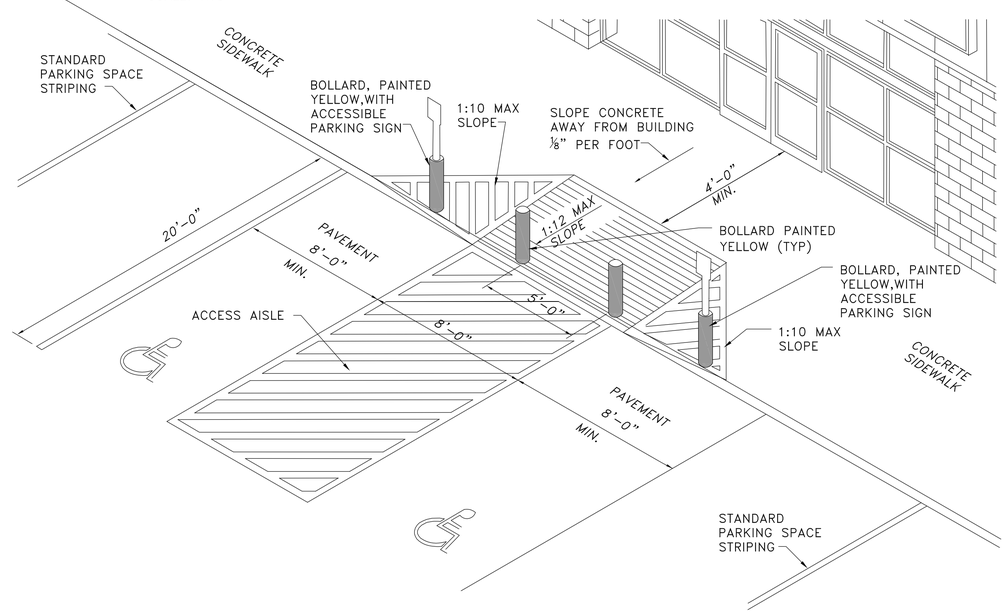

ACCESSIBLE PARKING,
ACCESS RAMP & ACCESS AISLE DETAILS

SCALE: NTS

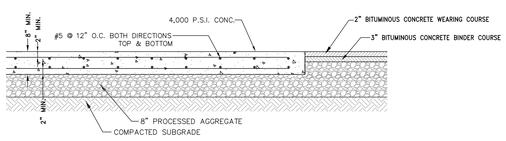

TYPLCAL SECTION OF CONCRETE PAD HEAVY DUTY CONCRETE FOR LOADING AREA

NOT TO SCALE

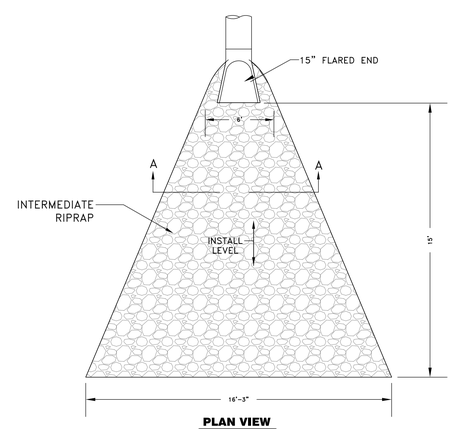

PLAN VIEW

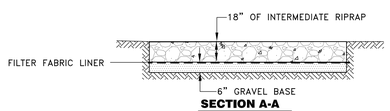

SECTION A-A

RIPRAP LEVEL SPREADER

N.T.S.

SCALE: AS SHOWN | CHECKED BY: JPC
DATE: DEC. 28, 2023 | DRAWN BY: JMP
JOB No.: 3470 | ACAD FILE: 3470-DET
SHEET: 14 OF: 15
REVISIONS: PER ITE, CRCOG AND RIDOT REVIEW AND PLANNER COMMENTS

HALLISEY, PEARSON & CASSIDY
CIVIL ENGINEERS & LAND SURVEYORS
630 MAIN STREET, UNIT #1A
CROMWELL, CONNECTICUT 06416
PHONE: (860)-529-6812, FAX: (860)-721-7709

SITE DETAILS
PREPARED FOR
REBEL-UNION PARTNERS, LLC
PROPERTY LOCATED AT
BRONCOS HIGHWAY (RT. #102)
BURRILLVILLE, RHODE ISLAND

JOHN PAUL GARCIA
No. 7649
REGISTERED PROFESSIONAL ENGINEER CIVIL
John Paul Garcia 7649

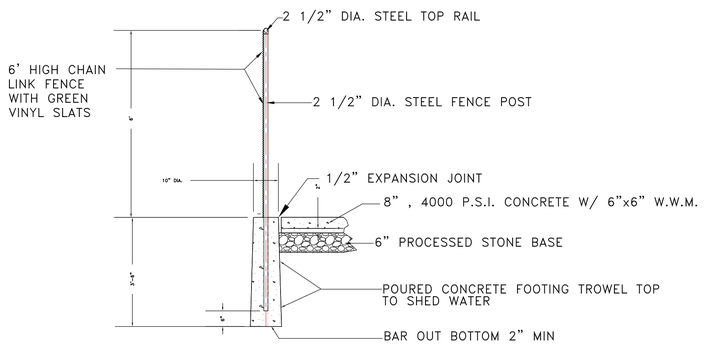

SECTION (TYP)

N.T.S.

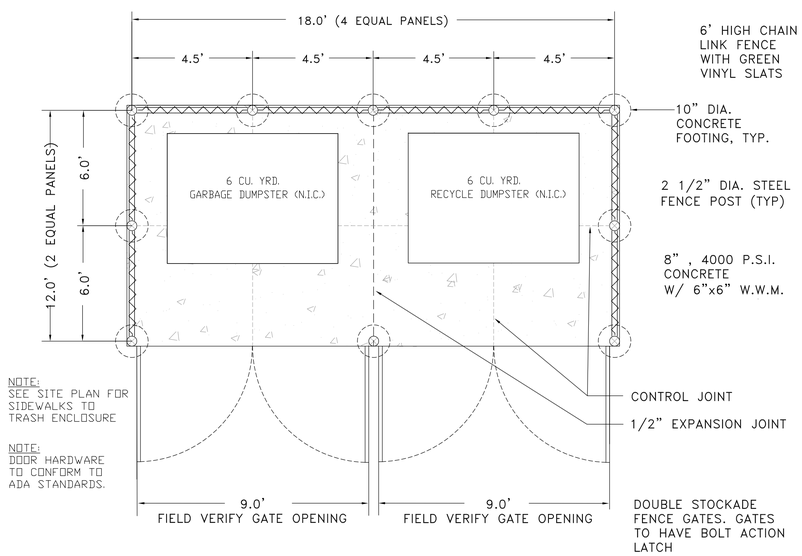

TRASH ENCLOSURE PLAN WITH CHAIN LINK FENCE

N.T.S.

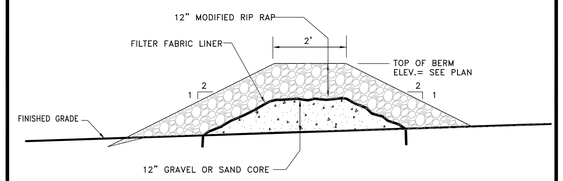

RIPRAP FILTER BERM

N.T.S.

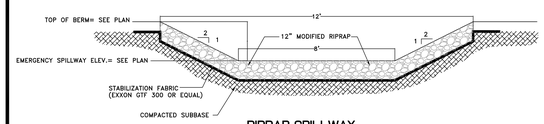

RIRRAP SPILLWAY

N.T.S.

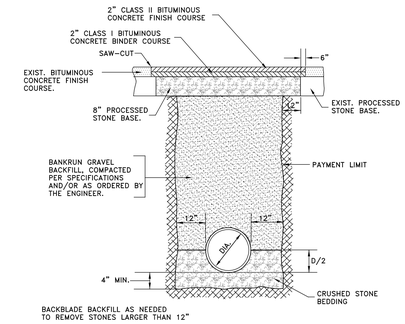

TYPICAL STORM TRENCH CROSS SECTION

NOT TO SCALE

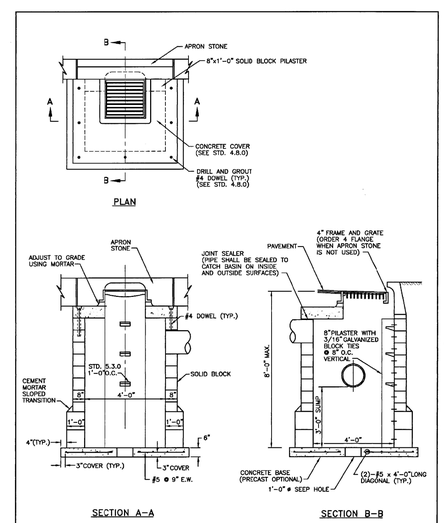

NOTES:
1. SHALL BE IN ACCORDANCE WITH SECTION 702 OF THE R.I. STANDARD SPECIFICATIONS.
2. 1/2" CEMENT MORTAR PLASTER COAT REQUIRED ON ALL INSIDE AND OUTSIDE SURFACES.
3. ADJUST DOWEL LOCATION BASED ON PIPE CONFIGURATION, AS REQUIRED.
4. USE 8" WALLS UP TO 6'-0" DEPTH, USE 1'-0" WALLS UP TO 8'-0" DEPTH.

RHODE ISLAND DEPARTMENT OF TRANSPORTATION

REVISIONS		
NO.	BY	DATE

SOLID BLOCK SHALLOW TYPE "F" SQUARE CATCH BASIN (PIPE COVER 1'-6" TO 3'-0")

CHIEF ENGINEER TRANSPORTATION — CHIEF DESIGN ENGINEER TRANSPORTATION — JUNE 15, 1998 ISSUE DATE

R.I. STANDARD 3.5.0

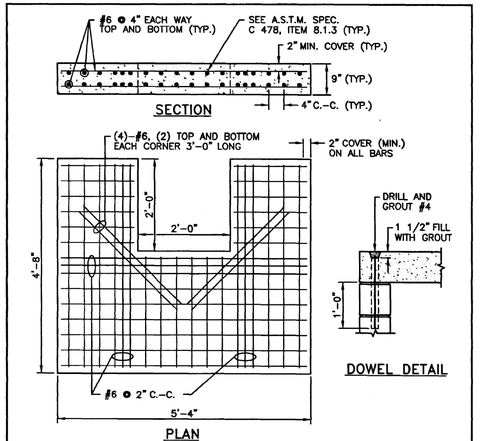

NOTES:
1. SHALL BE IN ACCORDANCE WITH SECTION 702 OF THE R.I. STANDARD SPECIFICATIONS.
2. THE CENTERLINE OF THE OPENING MUST BE WITHIN 2'-0" FROM THE STEPS.
3. TOP SLAB HAS BEEN REINFORCED TO MEET OR EXCEED H-25 OR HS-25 LOADINGS WITH EARTH PRESSURES INCLUDED. THIS IMPLIES THAT THE TOP SLAB IS DESIGNED FOR AXLE LOADS OF NO MORE THAN 20 TONS.
4. ALL REBARS ARE TO HAVE A MINIMUM 2" CLEARENCE FROM OPENING.
5. PRECAST SECTION SHALL BE LIFTED USING APPROVED LIFTING LUGS LOCATED SUCH THAT NO DAMAGE TO THE SLAB OCCURS.
6. DOWEL HOLES IN COVER TO BE FORMED OR CORED BY THE FABRICATOR.

RHODE ISLAND DEPARTMENT OF TRANSPORTATION

REVISIONS		
NO.	BY	DATE

CONCRETE COVER FOR SHALLOW TYPE "F" SQUARE CATCH BASINS

CHIEF ENGINEER TRANSPORTATION — CHIEF DESIGN ENGINEER TRANSPORTATION — JUNE 15, 1998 ISSUE DATE

R.I. STANDARD 4.8.0

SCALE: AS SHOWN	CHECKED BY: JPC
DATE: DEC. 28, 2023	DRAWN BY: JMP
JOB No.: 3470	ACAD FILE: 3470-DET

SHEET: 15 OF: 15

REVISIONS: MODIFIED, ADDED AND DELETED NOTES AND FLANGED COMPOSITE

HALLISEY, PEARSON & CASSIDY
CIVIL ENGINEERS & LAND SURVEYORS
630 MAIN STREET, UNIT #1A
CROMWELL, CONNECTICUT 06416
PHONE: (860)-529-6812, FAX: (860)-721-7709

SITE DETAILS
PREPARED FOR
REBEL-UNION PARTNERS, LLC
PROPERTY LOCATED AT
BRONCOS HIGHWAY (RT. #102)
BURRILLVILLE, RHODE ISLAND

JOHN PAUL GARCIA No. 7649 REGISTERED PROFESSIONAL ENGINEER CIVIL

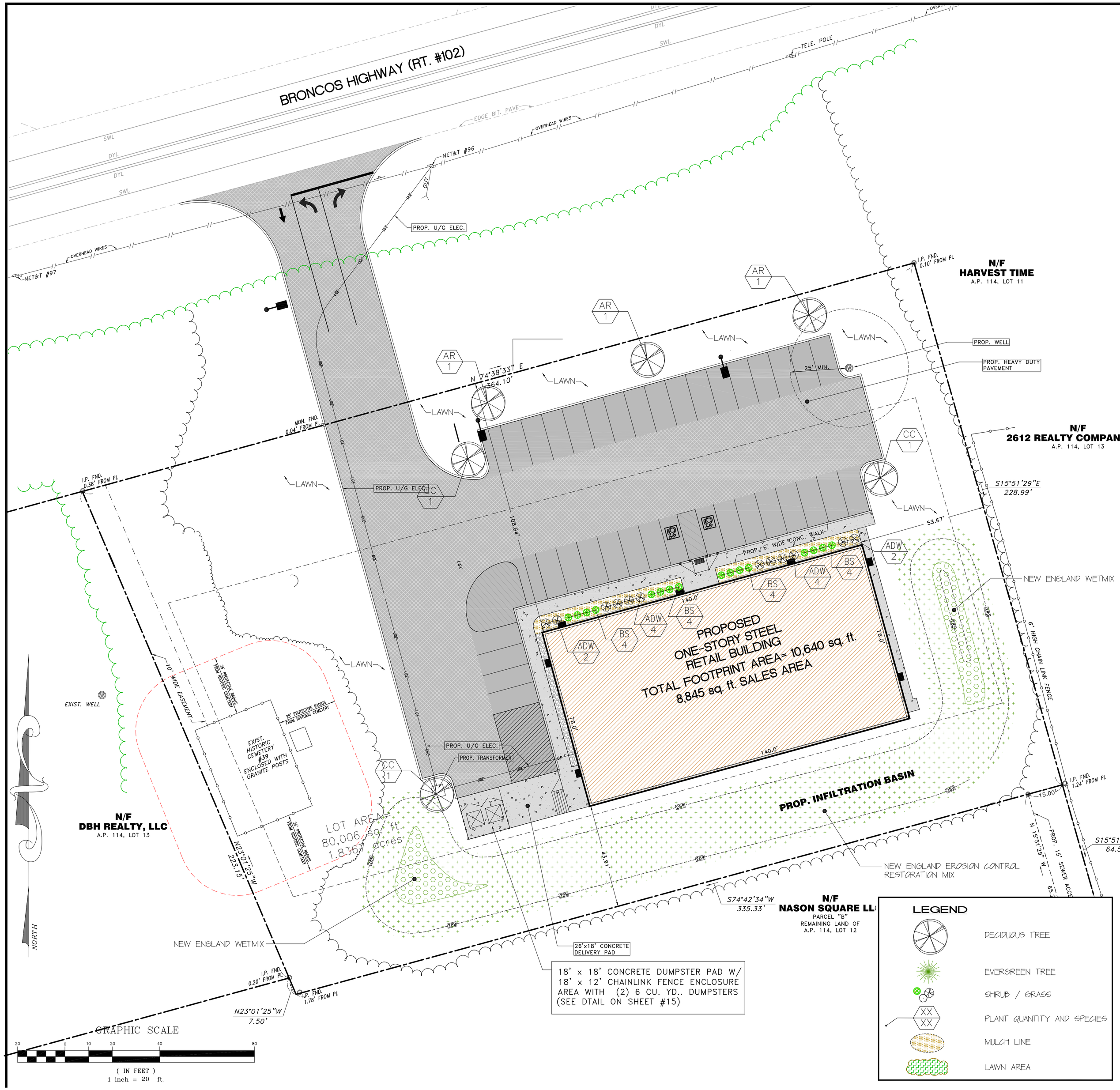

PLANT LIST:

KEY	BOTANICAL NAME	COMMON NAME	QUANITY	SIZE
TREES				
AS	ACER SACCHARUM	SUGAR MAPLE	3	6'-7' HGT.
CF	CORNUS FLORIDA	FLOWERING DOGWOOD	5	1.5"-2" CALIP.
SHRUBS				
BS	BUXUS SEMPERVIRENS	BOXWOOD	8	3 GALLON
ADW	AZALEA 'DELEWARE WHITE'	DELEWARE VALLEY WHITE AZALEA	8	24" HGT.

PLANT NOTES:

1. ALL PLANTING MATERIAL TO BE NURSERY GROWN STOCK TO A.A.N. STANDARDS.

2. THE CONTRACTOR SHALL SUPPLY ALL PLANTS IN QUANTITIES SUFFICIENT TO COMPLETE THE WORK SHOWN ON THE DRAWINGS AND LISTED IN THE PLANT LIST. IN THE EVENT OF A DISCREPANCY BETWEEN QUALITIES SHOWN IN THE PLANT LIST AND THOSE REQUIRED BY THE DRAWING, THE LARGER NUMBER SHALL APPLY.

3. ALL PLANTS SHALL BE APPROVED PRIOR TO INSTALLATION AND SHALL BE LOCATED ON SITE BY THE CONTRACTOR FOR APPROVAL OF THE LANDSCAPE ARCHITECT OF CIVIL ENGINEER. ANY INSTALLATIONS WHICH WERE NOT APPROVED BY THE LANDSCAPE ARCHITECT OR THE CIVIL ENGINEER AND WHICH ARE SUBSEQUENTLY REQUIRED TO BE MOVED WILL BE DONE AT THE CONTRACTORS EXPENSE.

4. PRECISE LOCATION OF ITEMS NOT DIMENSIONED ON AND PLAN ARE TO BE FIELD STAKED BY THE CONTRACTOR AND SHALL BE SUBJECT TO THE REQUIREMENTS IN THE PREVIOUS NOTE.

5. ALL SHRUB MASSING AND TREE PITS SHALL BE MULCHED TO A DEPTH OF 3" WITH SHREDDED PINE BARK MULCH.

6. TREES SHALL NOT BE STAKED UNLESS OTHERWISE NOTED.

7. THE CONTRACTOR IS RESPONSIBLE FOR ANY DAMAGE VEGETATION AND SHALL REPLACE OR REPAIR ANY DAMAGED MATERIAL, AT HIS OWN EXPENSE. THE CONTRACTOR SHALL CONTACT "CALL BEFORE YOU DIG" AT 811 PRIOR TO CONSTRUCTION.

8. ALL SHRUBS AND GROUND COVER PLANTING AREAS SHALL BE HAVE CONTINUOUS BEDS OF TOPSOIL 12" DEEP. ALL LAWN AREAS SHOULD HAVE A MINIMUM TOPSOIL BED OF 6".

9. THE CONTRACTOR IS RESPONSIBLE FOR LOCATING ALL UTILITIES IN THE FILED. WERE PLANT MATERIAL MAY INTERFERE WITH UTILITIES, THE CONTRACTOR SHALL NOTIFY THE LANDSCAPE ARCHITECT OR CIVIL ENGINEER TO COORDINATE THEIR INSTALLATION.

10. FOR PLANTING SOIL MIX, SEE SPECIFICATIONS OR PLANTING DETAILS.

11. ALL EXISTING RILL, GULL OR CHANNEL EROSION SHALL BE FILLED WITH APPROPRIATE BACKFILL MATERIAL, FINE RAKED, SCARIFIED AND STABILIZED WITH APPROPRIATE VEGETATIVE MATERIAL AND/OR APPROPRIATE SEDIMENTATION AND EROSION CONTROL MEASURES.

12. ADJUSTMENTS IN THE LOCATIONS OF THE PROPOSED PLANT MATERIAL AS A RESULT OF EXISTING VEGETATION TO REMAIN SHALL BE APPROVED BY THE LANDSCAPE ARCHITECT PRIOR TO INSTALLATION.

13. THE CONTRACTOR IS RESPONSIBLE FOR ALL MAINTENANCE REPAIR AND REPLACEMENT OF PLANT MATERIAL, AS REQUIRED, FOR THE DURATION OF THE PROJECT AND SUBSEQUENT WARRANTY PERIOD.

14. PLANTINGS INSTALLED IN THE DRY SUMMER MONTHS AND / OR LAWN SEEDED OUT OF SPRING OR FALL PERIODS, IF ALLOWED BY OWNER, WILL REQUIRE AGGRESSIVE IRRIGATION PROGRAMS AT THE CONTRACTOR'S EXPENSE, UNLESS DIRECTED BY THE OWNER.

15. UPON COMPLETION OF PLANTING, REMOVE FROM SITE ALL EXCESS SOIL, MULCH, AND MATERIALS AND DEBRIS RESULTING FROM WORK OPERATIONS. CLEAN UP SHOULD BE COMPLETED AT THE END OF EACH WORKING DAY. RESTORE TO ORIGINAL CONDITIONS ALL DAMAGED PAVEMENTS, PLANTING AREAS, STRUCTURES AND LAWN AREAS RESULTING FROM LANDSCAPING OPERATIONS.

16. CONTRACTOR SHALL SURVEY, LOCATE, AND PROTECT ALL TREES WITHIN AREAS SHOWN AS "EXISTING VEGETATION TO REMAIN" WITHIN THE DEVELOPMENT ENVELOPE FOR REVIEW BY LANDSCAPE ARCHITECT OR CIVIL ENGINEER PRIOR TO CLEARING OPERATIONS.

17. CONTRACTOR TO RESEED ALL DISTURBED AREAS.

SEEDING AND MULCHING SPECIFICATIONS:

SEEDING MAY BE OF A PERMANENT OR TEMPORARY TYPE DEPENDING ON THE TIME OF YEAR. IT IS DONE. PERMANENT SEEDING SHOULD BE DONE DURING THE PERIODS OF APRIL 1 THROUGH JUNE 1 OR AUGUST 15 THROUGH SEPTEMBER 1.

DISTURBED AREA THAT ARE TO BE RESEEDED SHALL BE TOPSOILED, LIMED & FERTILIZED PRIOR TO RESEEDING. LABORATORY TESTING OF THE TOPSOIL IS RECOMMENDED TO DETERMINE RATES OF APPLICATION FOR THE LIME AND FERTILIZER. LACKING SUCH TESTING THE FOLLOWING ARE RECOMMENDED:

LIME 2 TONS/ACRE (90 lbs./1000 sq. ft.)
FERTILIZER (10-10-10) (75 lbs./1000 sq. ft.)

SEEDING RECOMMENDATIONS ARE AS FOLLOWS:

TEMPORARY -ANNUAL RYEGRASS @40LBS/ACRE

PERMANENT -KENTUCKY BLUE GRASS @20LBS/ACRE
CREEPING RED FESCUE @20LBS/ACRE
PERENNIAL RYEGRASS @5LBS/ACRE
TOTAL 45LBS/ACRE

-MULCHING SHALL BE OF A TEMPORARY TYPE, TO PROTECT THE SOIL & SEED FROM EROSION AND TO ALSO PROMOTE PLANT GROWTH. MULCHING SHALL BE DONE AFTER FINAL GRADING AND SEEDING.

-MULCHING RECOMMENDATION ARE AS FOLLOWS:
-STRAW OR HAY (FREE FROM WEEDS AND COARSE MATTER)
SPREAD WITH MULCH BLOWER OR BY HAND
APPLY @ RATE OF 70 - 90 LBS/100 SQ. FT.

INSTALLATION SCHEDULE and MAINTENANCE PLAN:

1. PLANTING ONLY UNDER FAVORABLE WEATHER CONDITIONS. PLANTING WILL NOT BE PERMITTED WHEN GROUND IS FROZEN OR EXCESSIVELY MOIST.
DECIDUOUS MATERIAL
SPRING: MARCH 21 TO JUNE 01.
FALL: SEPT. 01 TO NOV. 01
- IF PLANTING DURING PEAK SUMMER MONTHS OF JULY AND AUGUST, CONTRACTOR SHALL AGGRESSIVELY IRRIGATE PLANTS TO ENSURE ESTABLISHMENT AND SURVIVAL.

2. DO NOT PLANT WHEN GROUND IS FROZEN, SNOW COVERED, OR MUDDY.

3. THE CONTRACTOR IS RESPONSIBLE FOR ALL MAINTENANCE REPAIR AND REPLACEMENT OF PLANT MATERIAL AS REQUIRED, FOR THE DURATION OF THE PROJECT AND SUBSEQUENT PERIOD OF ONE FULL YEAR FROM COMMENCEMENT OF PLANT INSTALLATION.

LEGEND

- DECIDUOUS TREE
- EVERGREEN TREE
- SHRUB / GRASS
- XX XX PLANT QUANTITY AND SPECIES
- MULCH LINE
- LAWN AREA

SCALE: 1"=20' | CHECKED BY: JPC
DATE: DEC. 28, 2023 | DRAWN BY: JMP
JOB No.: 3470 | ACAD FILE: 3470-ZI-SL
SHEET: LS- 1 OF:
REVISIONS:
MARCH 02, 2024 PER PEER REVIEW AND PLANNER COMMENTS

HALLISEY, PEARSON & CASSIDY
CIVIL ENGINEERS & LAND SURVEYORS
630 MAIN STREET, UNIT #1A
CROMWELL, CONNECTICUT 06416
PHONE: (860)-529-6812, FAX: (860)-721-7709

SITE LANDSCAPING PLAN
PREPARED FOR
REBEL-UNION PARTNERS, LLC
PROPERTY LOCATED AT
BRONCOS HIGHWAY (RT. #102)
BURRILLVILLE, RHODE ISLAND

JOHN PAUL GARCIA
No. 7649
REGISTERED PROFESSIONAL ENGINEER CIVIL
John Paul Garcia #7649

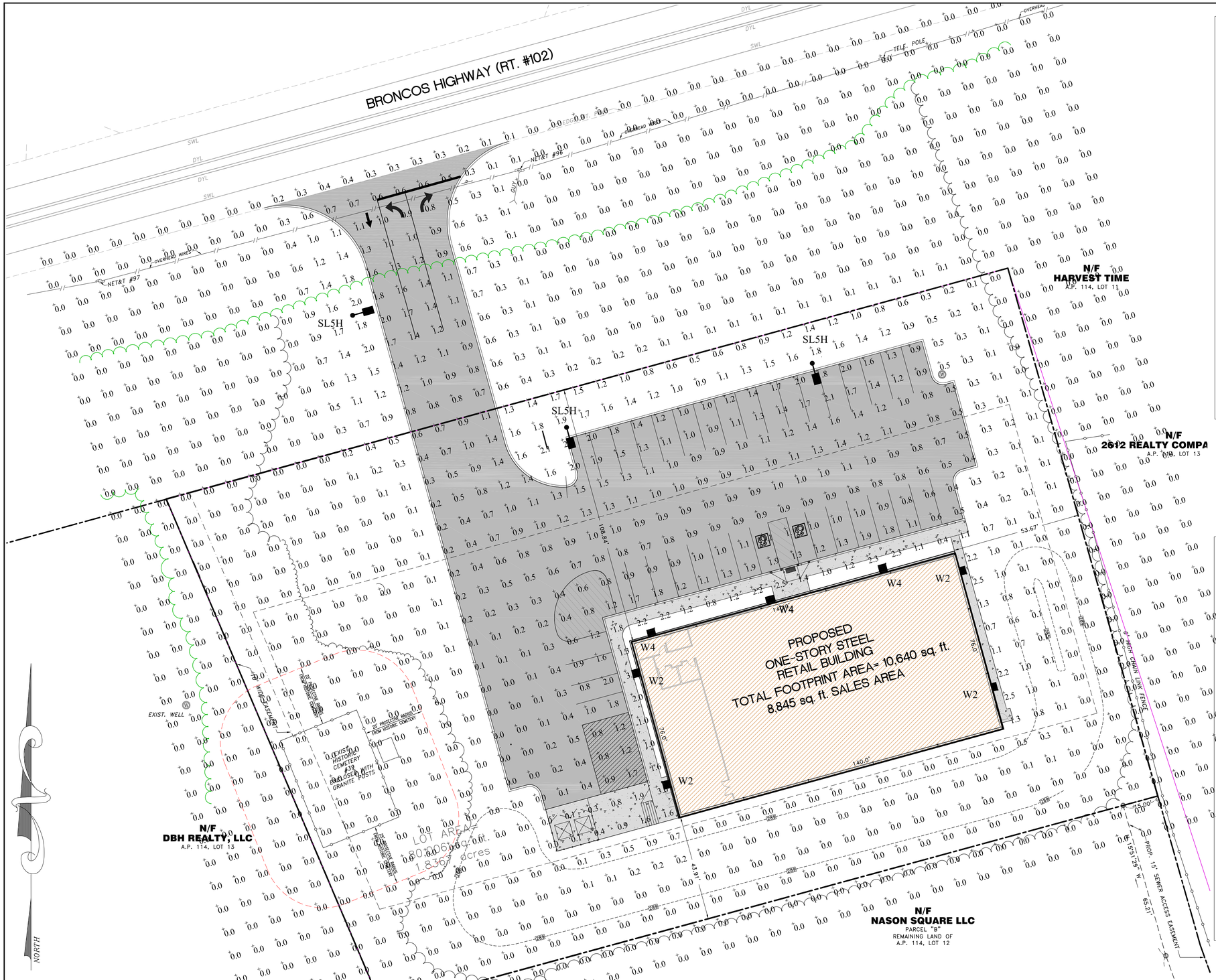

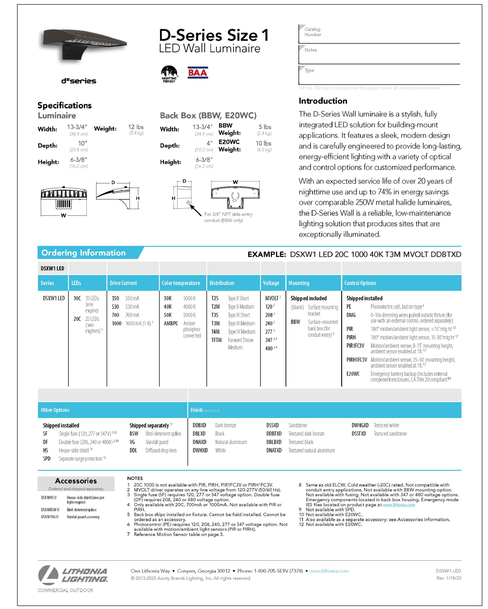

D-Series Size 1
LED Wall Luminaire

d*series

Specifications
Luminaire
Width: 13-3/4" (34.9 cm)
Depth: 10" (25.4 cm)
Height: 6-3/8" (16.2 cm)
Weight: 12 lbs (5.4 kg)

Back Box (BBW, E20WC)
Width: 13-3/4" (34.9 cm)
Depth: 4" (10.2 cm)
Height: 6-3/8" (16.2 cm)
BBW Weight: 5 lbs (2.7 kg)
E20WC Weight: 10 lbs (4.5 kg)

Introduction
The D-Series Wall luminaire is a stylish, fully integrated LED solution for building-mount applications. It features a sleek, modern design and is carefully engineered to provide long-lasting, energy-efficient lighting with a variety of optical and control options for customized performance.

With an expected service life of over 20 years of nighttime use and up to 74% in energy savings over comparable 250W metal halide luminaires, the D-Series Wall is a reliable, low-maintenance lighting solution that produces sites that are exceptionally illuminated.

Ordering Information EXAMPLE: DSXW1 LED 20C 1000 40K T3M MVOLT DDBTXD

DSXW1 LED

Series	LEDs	Drive Current	Color temperature	Distribution	Voltage	Mounting	Control Options
DSXW1 LED	10C 10 LEDs (one engine)	350 350 mA	30K 3000K	T2S Type II Short	MVOLT[1]	Shipped included	Shipped installed
	20C 20 LEDs (two engines)	520 520 mA	40K 4000K	T2M Type II Medium	120[1]	SPA Square pole mounting	PE Photoelectric cell, built-in type[2]
		700 700 mA	50K 5000K	T3S Type III Short	208[1]	RPA Round pole mounting	DMG 0-10V dimming wires pulled outside fixture (for use with an external control, ordered separately)
		1000 1000 mA (1 A)[1]	AMBPC Amber phosphor converted	T3M Type III Medium	240[1]	WBA Wall bracket	PIR 180° motion/ambient light sensor, 15-30 mounting ht[2]
				T4M Type IV Medium	277[1]	MA Mast arm adapter (mounts on 2 1/8" OD horizontal mast)	PIRH 180° motion/ambient light sensor, 15-30 mounting ht[2]
				TFTM Forward Throw Medium	347[2,3]		PIR1FC3V Motion/ambient sensor, 8-15' mounting height, ambient sensor enabled at 3fc[2,3]
					480[2,3]		PIRH1FC3V Motion/ambient sensor, 15-30' mounting height, ambient sensor enabled at 3fc[2,3]
							E20WC Emergency battery backup (includes external component enclosure, CA Title 20 compliant)[4]

Other Options

Shipped installed	Shipped separately[5]	Finish (required)	
SF Single fuse (120, 277 or 347V)[1,6]	BSW Base wireguard (plastic)	DDBXD Dark bronze	DDBTXD Textured dark bronze
DF Double fuse (208, 240 or 480V)[1,6]	WG Vandal guard	DBLXD Black	DBLBKTXD Textured black
HS House-side shield[7]	DDL Diffused drop lens	DNAXD Natural aluminum	DNATXD Textured natural aluminum
SPD Separate surge protection[10]		DWHXD White	DWHGXD Textured white
		DSSTXD Textured sandstone	

Accessories
Ordered and shipped separately.
DSXW1BS Base side shield (one per light engine).
DSXW1BW U Bird deterrent spikes.
DSXW1WG Vandal guard cover.

NOTES
1 20C 1000 is not available with PIR, PIRH, PIR1FC3V or PIRH1FC3V.
2 MVOLT drive operates on any line voltage from 120-277V (50/60 Hz).
3 Single fuse (SF) requires 120, 277 or 347 voltage option. Double fuse (DF) requires 208, 240 or 480 voltage option.
4 Only available with 20C, 700 mA or 1000mA. Not available with PIR or PIRH.
5 Base box ships installed on fixture. Cannot be field installed. Cannot be ordered as an accessory.
6 Photocontrol (PE) requires 120, 208, 240, 277 or 347 voltage option. Not available with motion/ambient light sensors (PIR or PIRH).
7 Reference Motion Sensor table on page 3.
8 Same as old ELCW. Cold weather (-20C) rated. Not compatible with conduit entry applications. Not available with BBW mounting option. Not available with fusing. Not available with 347 or 480 voltage options. Not available with motion/ambient in back box housing. Emergency mode IES files located on product page at www.lithonia.com.
9 Not available with SPD.
10 Not available with E20WC.
11 Also available as a separate accessory; see Accessories Information.
12 Not available with E20WC.

LITHONIA LIGHTING. COMMERCIAL OUTDOOR
One Lithonia Way • Conyers, Georgia 30012 • Phone: 1-800-705-SERV (7378) • www.lithonia.com
© 2013-2023 Acuity Brands Lighting, Inc. All rights reserved.
DSXW1-LED
Rev. 1/19/23

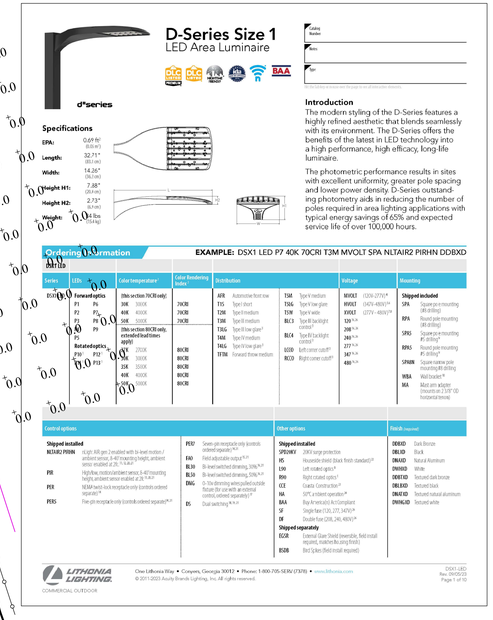

D-Series Size 1
LED Area Luminaire

d*series

Specifications
EPA: 0.69 ft² (0.06 m²)
Length: 32.71" (83.1 cm)
Width: 14.26" (36.2 cm)
Height H1: 7.88" (20.0 cm)
Height H2: 2.73" (6.9 cm)
Weight: 16.5 lbs (7.5 kg)

Introduction
The modern styling of the D-Series features a highly refined aesthetic that blends seamlessly with its environment. The D-Series offers the benefits of the latest in LED technology into a high performance, high efficacy, long-life luminaire.

The photometric performance results in sites with excellent uniformity, greater pole spacing and lower power density. D-Series outstanding photometry aids in reducing the number of poles required in area lighting applications with typical energy savings of 65% and expected service life of over 100,000 hours.

Ordering Information EXAMPLE: DSX1 LED P7 40K 70CRI T3M MVOLT SPA NLTAIR2 PIRHN DDBXD

DSX1 LED

Series	LEDs	Forward optics	Rotated optics	Color temperature* (this section 70CRI only)	Color Rendering Index	Distribution		Voltage	Mounting
DSX1 LED	P1 P1	P4 P4	P7 P7	30K 3000K	70CRI 70CRI	AFR Automotive front row	T5M Type V medium	MVOLT (120V-277V)[4]	Shipped included
	P2 P2	P5 P5	P8 P8	40K 4000K	70CRI 70CRI	T1S Type I short	T5W Type V wide	HVOLT (347V-480V)[5,6]	SPA Square pole mounting (#5 drilling)
	P3 P3	P6 P6	P9 P9	50K 5000K	70CRI 70CRI	T2M Type II medium	BLC Type III backlight control[7]	120[1,6,7]	RPA Round pole mounting (#5 drilling)
				30K or 40K or 50K only, extended lead times apply		T3M Type III medium	BLCX Type III backlight control[7]	208[1,6,7]	SPS2 Square pole mounting (#2 drilling)[8]
				2700K 2700K	80CRI 80CRI	T4M Type IV medium	LCCO Left corner cutoff[7]	240[1,6,7]	RPS2 Round pole mounting (#2 drilling)[8]
				3000K 3000K	80CRI 80CRI	TFTM Forward throw medium	RCCO Right corner cutoff[7]	277[1,6,7]	SPUNI Square nipple pole mounting (#2 drilling)
				3500K 3500K	80CRI 80CRI			347[2,5,6]	WBA Wall bracket
				4000K 4000K	80CRI 80CRI			480[2,5,6]	MA Mast arm adapter (mounts on 2 1/8" OD horizontal mast)
				5000K 5000K	80CRI 80CRI				

Control options	Other options	Finish (required)
Shipped installed	PER7 Seven pin receptacle only (controls ordered separately)[9,10]	DDBXD Dark bronze
NLTAIR2 PIRHN nLight AIR gen 2 enabled with bi-level motion / ambient sensor, 8-15' mounting height, ambient sensor enabled at 3fc.[11,6,8,9]	ERA Field adjustable output[12,13]	DBLXD Black
PIR High/low, motion/ambient sensor, 8-15' mounting height, ambient sensor enabled at 3fc.[11,8,9]	BL30 Bi-level switched dimming, 30%[14,15]	DNAXD Natural Aluminum
PER NEMA twist-lock receptacle only (controls ordered separately)[10]	BL50 Bi-level switched dimming, 50%[14,15]	DWHXD White
PER5 Five pin receptacle only (controls ordered separately)[10,9]	DMG 0-10v dimming wires pulled outside fixture (for use with an external control, ordered separately)[15]	DDBTXD Textured dark bronze
	DS Dual switching[14,15]	DBLBKTXD Textured black
		DNATXD Textured natural aluminum
		DWHGXD Textured white

Shipped separately
EGSR External Glare Shield (reversible, field install required, matches the Lithonia finish)
BSRB Bird Spikes (field install required)

LITHONIA LIGHTING. COMMERCIAL OUTDOOR
One Lithonia Way • Conyers, Georgia 30012 • Phone: 1-800-705-SERV (7378) • www.lithonia.com
© 2011-2023 Acuity Brands Lighting, Inc. All rights reserved.
DSX1 LED
Rev. 09/05/23
Page 1 of 10

Luminaire Schedule

Symbol	Qty	Label	Arrangement	Luminaire Lumens	Luminaire Watts	LLF	BUG Rating	Mounting Height	Description
	3	SL5H	Single	10601	123.9373	0.950	B3-U0-G3	18	Lithonia DSX1 LED P4 40K 80CRI T5W MVOLT SPA PIR HS DDBXD - SSS 18 4C DM19AS DDBXD 18FT POLE
	2	W2	Single	1521	13.3	0.950	B0-U0-G1	10	Lithonia DSXW1 LED 10C 350 40K T2S MVOLT BBW PIR DDBXD
	5	W4	Single	2808	26.2	0.950	B1-U0-G1	10	Lithonia DSXW1 LED 10C 700 40K TFTM MVOLT BBW PIR DDBXD

Calculation Summary

Label	CalcType	Units	Avg	Max	Min	Avg/Min	Max/Min
SITE	Illuminance	Fc	0.29	3.0	0.0	N.A.	N.A.
DRIVEWAY	Illuminance	Fc	1.05	2.0	0.2	5.25	10.00
PARKING	Illuminance	Fc	0.91	2.1	0.0	N.A.	N.A.

Greg Loda
Lighting Affiliates
1208 Cromwell Ave
Rocky Hill, CT 06067

website: www.lightingaffiliates.com
Voice Number : (860) 721-1171 x 219
Email : gloda@lightingaffiliates.com

SCALE: 1"=20'
DATE: DEC. 28, 2023
JOB No.: 3470
CHECKED BY: JPC
DRAWN BY: JMP
ACAD FILE: 3470-21-SL
SHEET: PH-1 OF:
REVISIONS:
MARCH 22, 2024 PER PEER REVIEW AND PLANNER COMMENTS

HALLISEY, PEARSON & CASSIDY
CIVIL ENGINEERS & LAND SURVEYORS
630 MAIN STREET, UNIT #1A
CROMWELL, CONNECTICUT 06416
PHONE: (860)-529-6812, FAX: (860)-721-7709

SITE LIGHTING PLAN
PREPARED FOR
REBEL-UNION PARTNERS, LLC
PROPERTY LOCATED AT
BRONCOS HIGHWAY (RT. #102)
BURRILLVILLE, RHODE ISLAND

JOHN PAUL GARCIA
No. 7649
REGISTERED PROFESSIONAL ENGINEER CIVIL